F12

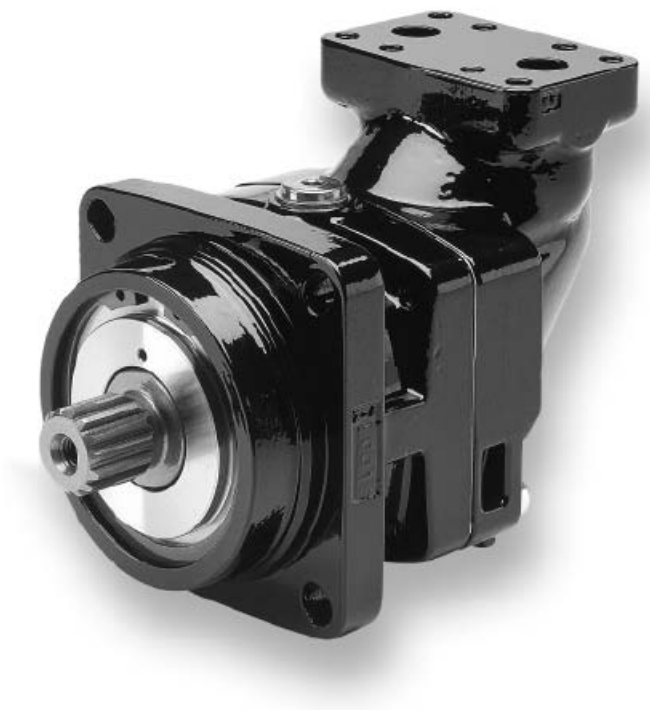

Content

Content	Page
F12 cross sections	39
Specifications	40
Efficiency	41
Noise level	41
Selfpriming speed and required inlet pressure	42
Ordering codes	
F12-ISO	43
F12-Cartridge	44
F12-SAE	45
Installation dimensions	
F12-030, -040, -060, -080, -090, -110 and -125 ISO	46
F12-030, -040, -060, -080, -090, -110 and -125 Cartridge	48
F12-030, -040, -060, -080, -090, -110 and -125 SAE 4 bolt flange	50
F12-030, -040, and -060 SAE 2 bolt flange	52
F12-150 Cetop	54
F12-150 SAE	55
F12-250 SAE	56
F12-250 SAE Options	57

www.kozz.cz

F12 cross sections

F12-030, -040, -060, -080 and -090
(F12-060 shown)

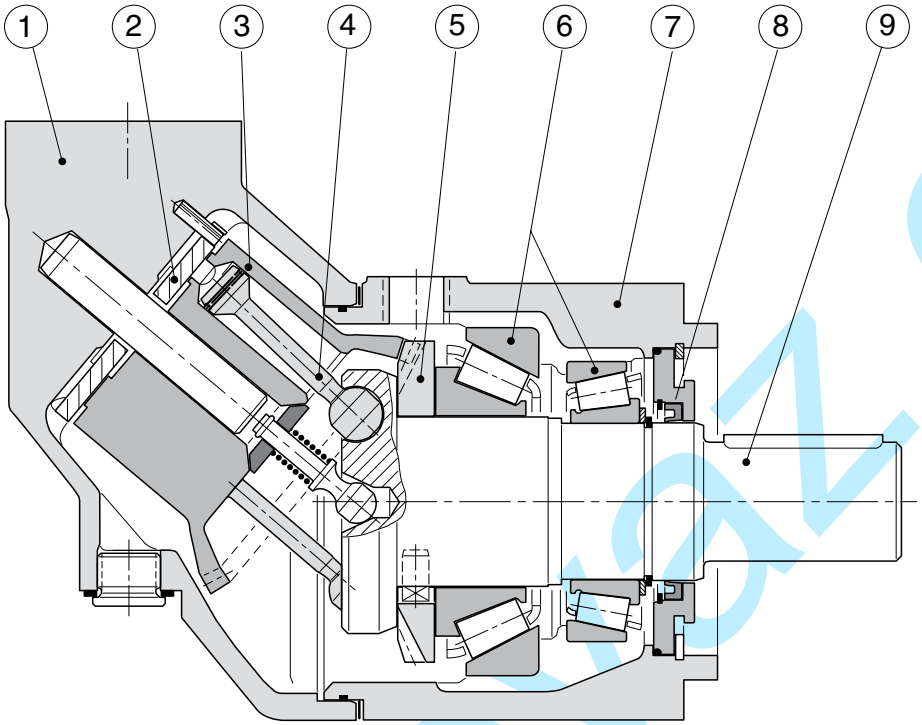

Legend:

1. Barrel housing
2. Valve plate
3. Cylinder barrel
4. Piston with piston ring
5. Timing gear
6. Tapered roller bearings
7. Bearing housing
8. Shaft seal
9. Output/input shaft
10. Port E (F12-110 and -125)
11. Needle bearings (F12-110 and -125)

F12-110 and -125
(F12-110 shown)

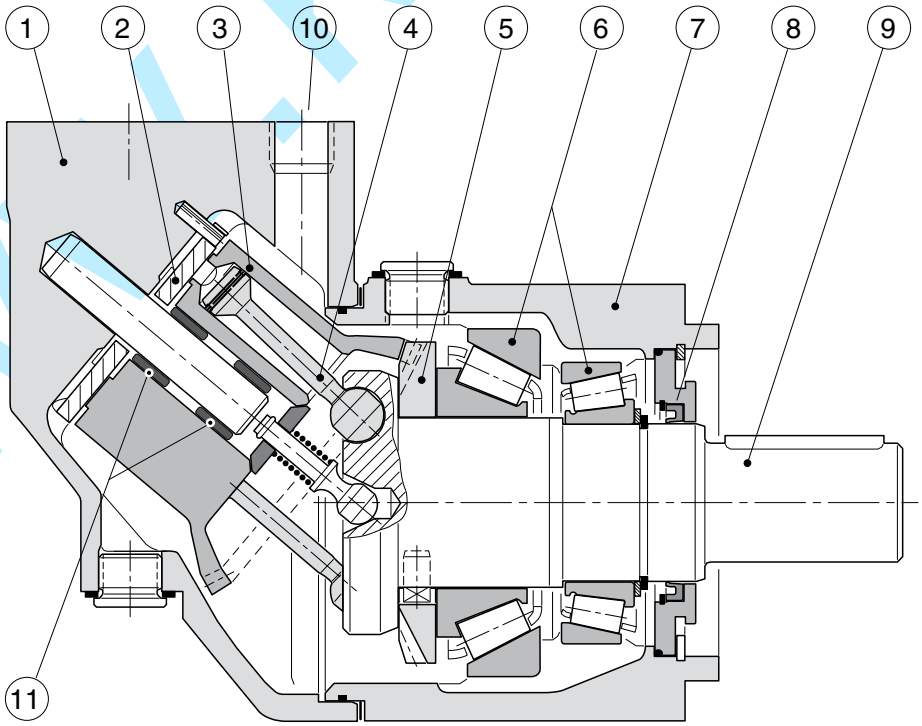

www.kovaz.cz

Frame size F12	**-030**	**-040**	**-060**	**-080**	**-090**	**-110**	**-125**	**-150**	**-250**
Displacement [cm^3/rev]	30.0	40.0	59.8	80.4	93.0	110.1	125.0	150	242
Operating pressure									
max intermittent[1)] [bar]	480	480	480	480	420	480	480	420	420
max continuous [bar]	420	420	420	420	350	420	420	350	350
Motor operating speed [rpm]									
max intermittent [1)]	7 300	6 700	5 800	5 300	5 000	4 800	4 600	3 500	3 000
max continuous [3)]	6 700	6 100	5 300	4 800	4 600	4 400	4 200	3 200	2 700
min continuous	50	50	50	50	50	50	50	50	50
Max pump selfpriming speed [2)]									
L or R function; max [rpm]	3150	2870	2500	2300	2 250	2200	2 100	1 700	1 500
Motor input flow									
max intermittent[1)] [l/min]	219	268	347	426	465	528	575	525	726
max continuous [l/min]	201	244	317	386	428	484	525	480	653
Drain temperature[3)], max [°C]	115	115	115	115	115	115	115	115	115
min [°C]	-40	-40	-40	-40	-40	-40	-40	-40	-40
Theoretical torque at 100 bar [Nm]	47.6	63.5	94.9	127.6	147.6	174.8	198.4	238.1	384.1
Mass moment of inertia									
($x10^{-3}$) [kg m^2]	1.7	2.9	5	8.4	8.4	11.2	11.2	40	46
Weight [kg]	12	16.5	21	26	26	36	36	70	77

1) Intermittent: max 6 seconds in any one minute.
2) Selfpriming speed valid at sea level. Find more info on page 42
3) See also installation information. Page 67

www.kovaz.cz

Efficiency

Because of its high overall efficiency, driving a motor/pump from series F12 requires less fuel or electric power.

Also, it allows the use of a small reservoir and heat exchanger, which in turn reduce cost, weight, and installation size.

The diagrams to the right show volumetric and mechanical efficiencies of an F12-030 motor.

F12-030 motors can be equipped with Power Boost which in high speed applications can decrease the mechanical losses by up to 15%, see page 7.

Contact Parker Hannifin for efficiency information on a particular F12 frame size that is being considered.

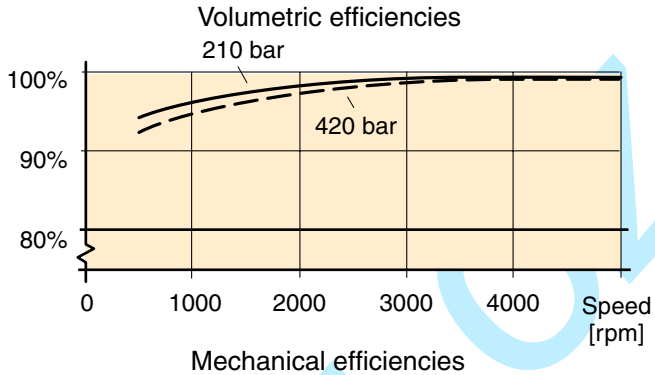

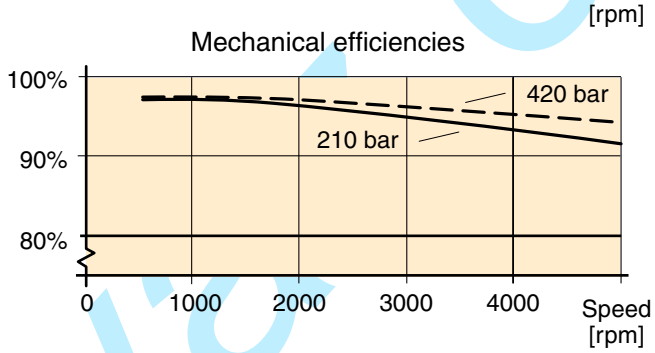

Noise level

Series F12 feature low noise levels from low to high speeds and pressures.

As an example, the diagram to the right shows the noise level of an F12-030 pump/motor.

The noise level is measured in a semi-anechoic room, 1 m behind the unit.

The noise level for a particular motor/pump may vary ±2 dB(A) compared to what is shown in the diagram.

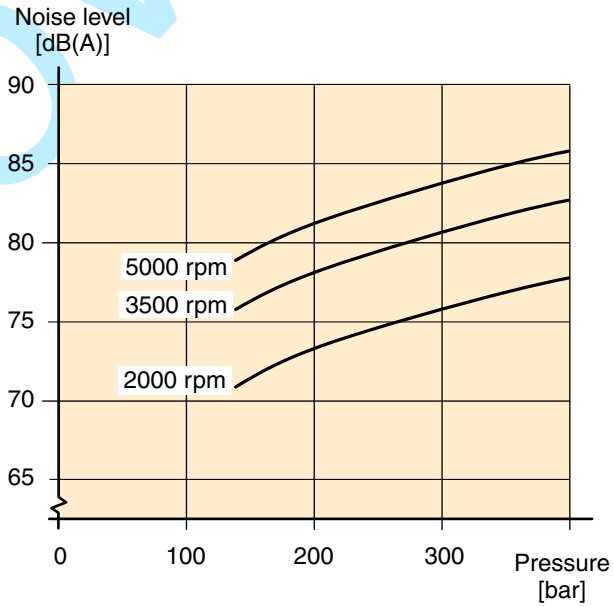

NOTE: Noise information for F12 frame sizes are available from Parker Hannifin.

www.kovar.cz

Selfpriming speed and required inlet pressure

Series F12

When operating the F12 as a pump (with L or R valve plate) above the selfpriming speed, the inlet must be pressurized. Increased noise and deteriorating performance may otherwise be experienced.

Diagrams 2 and 3 shows required pump inlet pressure vs. shaft speed.

The F12 motor (type M valve plate) sometimes operates as a pump e.g. when used in a propel transmission and the vehicle is going downhill.

Minimum required inlet pressure versus shaft speed is shown in the diagrams.

The inlet pressure can be charged by external pump, pressurized reservoir or using BLA Boost unit.

Find more info about the BLA unit at page 66.

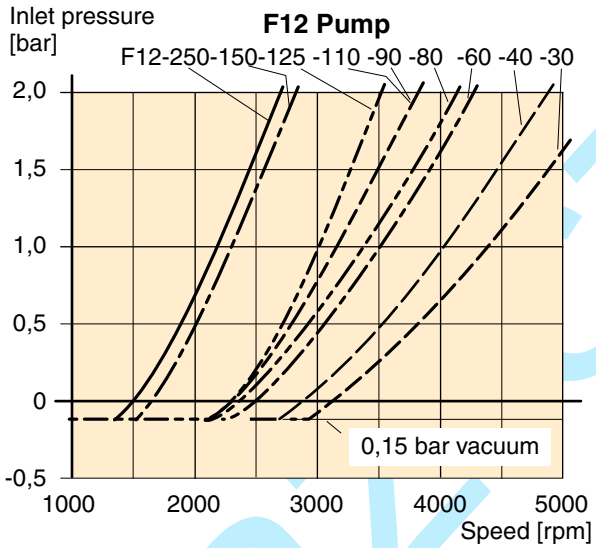

Diagram 2. Min. required pump (F12-L or -R) inlet press.

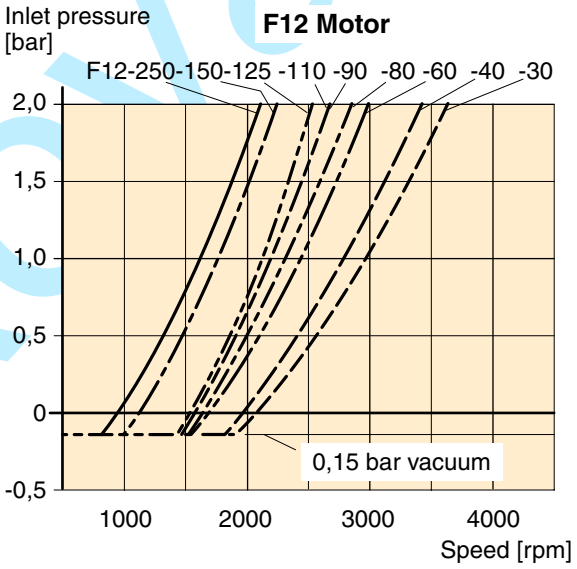

Diagram 3. Min. required motor (F12-M) inlet pressure.

www.kovaz.cz

F12	—		—			—			—		—		—		—	
F12-ISO		Frame size		Function	Main ports		Mounting flange	Shaft seal		Shaft		Version number		Option page 6, 61		Option page 7, 65

Frame size	
Code	Displacem. (cm^3/rev)
030	30.0
040	40.0
060	59.8
080	80.4
090	93.0
110	110.1
125	125.0

Version number
(assigned for special versions)

Frame size		30	40	60	80	90	110	125
Code	Shaft*							
D	DIN Spline, Standard	x	x	x	x	x	x	x
A	DIN Spline, Optional	-	(x)	-	-	-	-	-
Z	DIN Spline, Optional	(x)	(x)	(x)	(x)	(x)	(x)	(x)
K	Metric key, Standard	x	x	x	x	x	x	x
J	Metric key, Optional	-	(x)	-	-	-	-	-
P	Metric key, Optional	(x)	-	-	-	-	-	-
V	Tapered shaft	(x)	(x)	(x)	-	-	(x)	(x)

*See also dimensional drawings on page 46.

Frame size		30	40	60	80	90	110	125
Code	Function							
M	Motor	x	x	x	x	x	x	x
S	Motor, high speed	(x)	(x)	(x)	-	-	-	-
R	Pump, clockwise rotation	(x)	(x)	(x)	(x)	(x)	(x)	(x)
L	Pump, counter clockwise rot'n	(x)	(x)	(x)	(x)	(x)	(x)	(x)

For other versions, contact Parker Hannifin

Frame size		30	40	60	80	90	110	125
Code	Option							
0000	Standard	x	x	x	x	x	x	x
L130	Flushing valve 1.3 mm orifice	(x)	(x)	(x)	(x)	(x)	-[1]	-[1]
MUVR	Make up/Anti cavitation valve clockwise rotation	(x)	-	-	-	-	-	-
MUVL	Make up/Anti cavitation valve counter clockwise rotation	(x)	-	-	-	-	-	-
P__R [2]	Pressure relief valve clockwise rotation	(x)	(x)	(x)	-	-	-	-
P__L [2]	Pressure relief valve counter clockwise rotation	(x)	(x)	(x)	-	-	-	-

Frame size		30	40	60	80	90	110	125
Code	Main ports							
F	SAE 6000 psi flange	x	x	x	x	x	x	x

Frame size		30	40	60	80	90	110	125
Code	Mounting flange							
I	ISO flange	x	x	x	x	x	x	x

Frame size		30	40	60	80	90	110	125
Code	Option							
00	Standard	x	x	x	x	x	x	x
P_	Prepared for speed sensor	(x)	(x)	(x)	(x)	(x)	(x)	(x)
B_	Power Boost and Prepared for speed sensor	(x)	-	-	-	-	-	-
_T	Painted Black	(x)	(x)	(x)	(x)	(x)	(x)	(x)

Frame size		30	40	60	80	90	110	125
Code	Shaft seal							
N	NBR, low pressure	(x)	(x)	(x)	(x)	(x)	(x)	(x)
V	FPM, high pressure, high temperature	x	x	x	x	x	x	x
S	PTFE, high speed	(x)	-	-	-	-	-	-

x: Available (x): Optional – : Not available

1) F12-110 and -125: Accessory valve block (page 60)

2) Pressure setting on page 61

www.kozak.cz

F12	—		—			—			—		—		—		—	
		Frame size		Function	Main ports		Mounting flange	Shaft seal		Shaft		Version number		Option page 6, 61		Option page 7, 65

F12-Cartridge CETOP

Frame size	
Code	Displacem. (cm^3/rev)
030	30.0
040	40.0
060	59.8
080	80.4
090	93.0
110	110.1
125	125.0
150	150.0

Version number
(assigned for special versions)

Frame size		30	40	60	80	90	110	125	150
Code	Shaft*								
C	DIN Spline, Std.	x	x	x	x	x	x	x	-
K	Metric key, Option	(x)	-	(x)	(x)	(x)	(x)	(x)	x
J	Metric key, Option	-	(x)	-	-	-	-	-	-
B	Spline DIN 5480	-	-	(x)	-	-	(x)	(x)	-
D	Spline DIN 5480	-	-	-	-	-	-	-	(x)
V	Tapered shaft	(x)	(x)	(x)	-	-	(x)	(x)	-

*See also dimensional drawings on pages 48 and 54.

Frame size		30	40	60	80	90	110	125	150
Code	Function								
M	Motor	x	x	x	x	x	x	x	x
S	Motor, high speed	(x)	(x)	(x)	-	-	-	-	-
R	Pump, clockwise rotation	-	-	-	-	-	-	-	(x)
L	Pump, counter clockwise rot'n	-	-	-	-	-	-	-	(x)

For other versions, contact Parker Hannifin

Frame size		30	40	60	80	90	110	125	150
Code	Option								
0000	Standard	x	x	x	x	x	x	x	x
L130	Flushing valve 1.3 mm orifice	(x)	(x)	(x)	(x)	(x)	-[1]	-[1]	-
MUVR	Make up/Anti cavitation valve clockwise rotation	(x)	-	-	-	-	-	-	-
MUVL	Make up/Anti cavitation valve counter clockwise rotation	(x)	-	-	-	-	-	-	-
P__R [2]	Pressure relief valve clockwise rotation	(x)	(x)	(x)	-	-	-	-	-
P__L [2]	Pressure relief valve counter clockwise rotation	(x)	(x)	(x)	-	-	-	-	-

Frame size		30	40	60	80	90	110	125	150
Code	Main ports								
F	SAE 6000 psi flange	x	x	x	x	x	x	x	x

Frame size		30	40	60	80	90	110	125	150
Code	Mounting flange								
C	Cartridge	x	x	x	x	x	x	x	-
C	CETOP	-	-	-	-	-	-	-	x

Frame size		30	40	60	80	90	110	125	150
Code	Option								
00	Standard	x	x	x	x	x	x	x	x
P_	Prepared for speed sensor	x	(x)	(x)	(x)	(x)	x	x	-
B_	Power Boost and Prepared for speed sensor	(x)	-	-	-	-	-	-	-
_T	Painted Black	(x)	(x)	(x)	(x)	(x)	(x)	(x)	(x)

Frame size		30	40	60	80	90	110	125	150
Code	Shaft seal								
N	NBR, low pressure	(x)	(x)	(x)	(x)	(x)	(x)	(x)	(x)
V	FPM, high pressure, high temperature	x	x	x	x	x	x	x	x
S	PTFE, high speed	(x)	-	-	-	-	-	-	-

x: Available (x): Optional – : Not available

1) F12-110 and -125: Accessory valve block (page 60)

2) Pressure setting on page 61

www.kovaz.cz

F12	—		—			—			—		—		—		—	

F12-SAE Frame size — Function — Main ports — Mounting flange — Shaft seal — Shaft — Version number — Option page 6, 61 — Option page 7, 65

Frame size	
Code	Displacem. (cm^3/rev)
030	30.0
040	40.0
060	59.8
080	80.4
090	93.0
110	110.1
125	125.0
150	150.0
250	242.0

Frame size		30	40	60	80	90	110	125	150	250
Code	Function									
M	Motor	x	x	x	x	x	x	x	x	-
S	Motor, high speed	(x)	(x)	(x)	-	-	-	-	-	-
Q	Motor	-	-	-	-	-	-	-	-	x
R	Pump, clockwise rotation	(x)	(x)	(x)	(x)	(x)	(x)	(x)	(x)	(x)
L	Pump, counter clockwise rot'n	(x)	(x)	(x)	(x)	(x)	(x)	(x)	(x)	(x)

For other versions, contact Parker Hannifin

Frame size		30	40	60	80	90	110	125	150	250
Code	Main ports									
S	SAE 6000 psi flange	x	x	x	x	x	x	x	-	-
U	SAE UN threads	(x)	(x)	(x)	(x)	(x)	(x)	(x)	-	-
F	SAE 6000 psi flange[2)]	-	-	-	-	-	-	-	x	x

Frame size		30	40	60	80	90	110	125	150	250
Code	Mounting flange									
S	SAE 4 bolt	x	x	x	x	x	x	x	x	x
T	SAE 2 bolt	x	x	x	-	-	-	-	-	-
R	SAE 4 bolt	-	-		(x)	(x)	-	-	-	-

x: Available (x): Optional – : Not available
1) F12-110 and -125: Accessory valve block (page 60)
2) Metric threads
3) Pressure setting on page 61

Version number
(assigned for special versions)

Frame size		30	40	60	80	90	110	125	150	250
Code	Shaft*									
T	SAE key, Standard	x	x	x	x	x	x	x	x	x
R	SAE key, Optional	-	-	-	(x)	(x)	-	-	-	-
S	SAE Spline, Optional	(x)	(x)	(x)	(x)	(x)	(x)	(x)	(x)	(x)
F	SAE Spline, Optional	-	-	-	(x)	(x)	-	-	(x)	(x)
U	SAE Spline, Optional	-	-	-	(x)	(x)	-	-	-	-
K	Metric key, Standard	-	-	-	-	-	-	-	(x)	x
D	Spline DIN 5480	-	-	-	-	-	-	-	-	(x)
V	Tapered shaft	(x)	(x)	(x)	-	-	(x)	(x)	-	-

*See also dimensional drawings on pages 50 - 53, 55 - 57.

Frame size		30	40	60	80	90	110	125	150	250
Code	Option									
0000	Standard	x	x	x	x	x	x	x	x	x
L130	Flushing valve 1.3 mm orifice	(x)	(x)	(x)	(x)	(x)	-[1)]	-[1)]	-	-
MUVR	Make up/Anti cavitation valve clockwise rotation	(x)	-	-	-	-	-	-	-	-
MUVL	Make up/Anti cavitation valve counter clockwise rotation	(x)	-	-	-	-	-	-	-	-
P__R [3)]	Pressure relief valve clockwise rotation	(x)	(x)	(x)	-	-	-	-	-	-
P__L [3)]	Pressure relief valve counter clockwise rotation	(x)	(x)	(x)	-	-	-	-	-	-

Frame size		30	40	60	80	90	110	125	150	250
Code	Option									
00	Standard	x	x	x	x	x	x	x	x	x
P_	Prepared for speed sensor	(x)	(x)	(x)	(x)	(x)	x	x	-	(x)
B_	Power Boost and Prepared for speed sensor	(x)	-	-	-	-	-	-	-	
_T	Painted Black	(x)	(x)	(x)	(x)	(x)	(x)	(x)	(x)	(x)

Frame size		30	40	60	80	90	110	125	150	250
Code	Shaft seal									
N	NBR, low pressure	(x)	(x)	(x)	(x)	(x)	(x)	(x)	(x)	-
V	FPM, high pressure, high temperature	x	x	x	x	x	x	x	x	x
S	PTFE, high speed	(x)	-	-	-	-	-	-	-	-

3

www.kovaz.cz

F12-30, -40, -60, -80, -90, -110 and -125
(ISO versions)

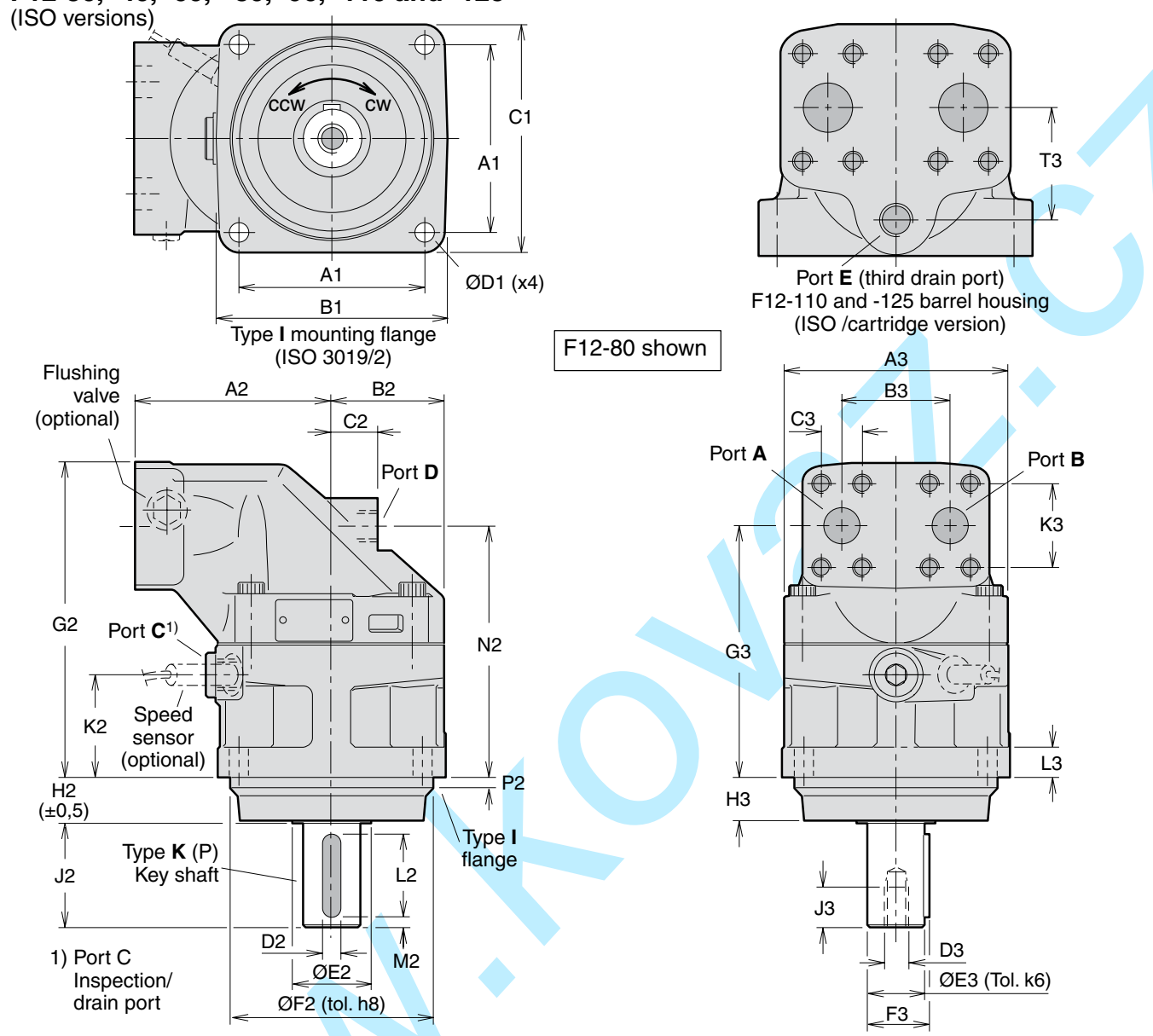

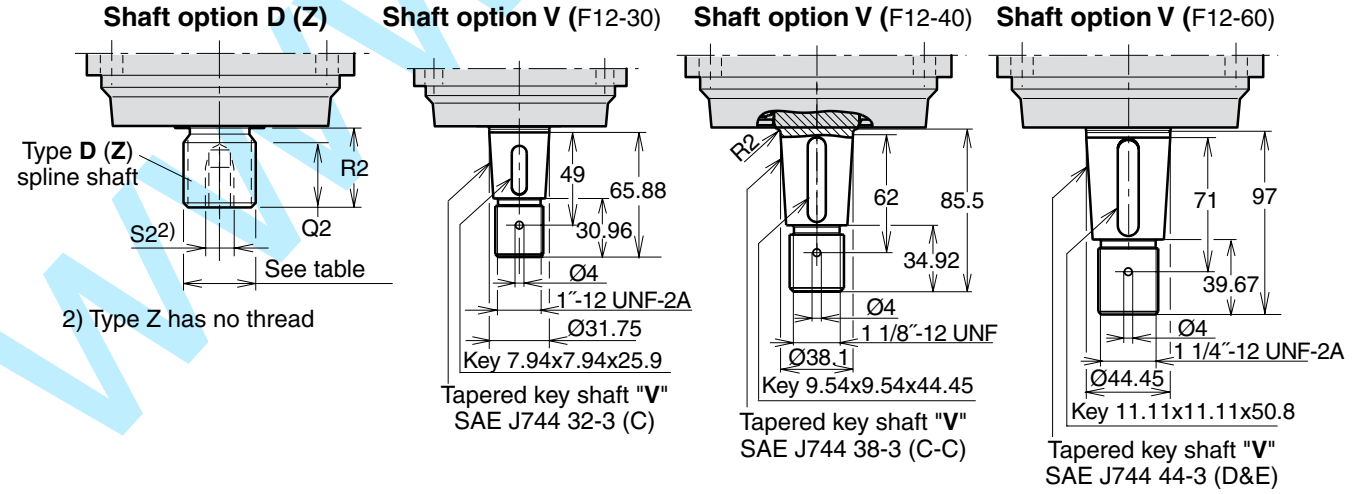

www.kovoz.cz

Dim.	F12-30	F12-40	F12-60	F12-80 F12-90	F12-110 F12-125
A1	88.4	113.2	113.2	127.2	141.4
B1	118	146	146	158	180
C1	118	142	144	155	180
D1	11	13.5	13.5	13.5	18
A2	100	110	125	135	145
B2	59	65	70	78	85
C2	25	26	22	32	38
D2	8	8	10	12	14
E2	33	42	42	52	58
F2	100	125	125	140	160
G2	172	173	190	216	231
H2	25.5	32.5	32.5	32.5	40.5
J2	50	60	60	70	82
K2	55	52	54	70.5	66.5
L2	40	50	50	56	70
M2	5	5	5	7	6
N2	136.5	137	154	172.5	179
P2	8	8	8	8	8
Q2	28	28	33	36	41
R2 1)	35	35	40	45	50
R2 2)	43	35	35	41	-
S2 1)	M12 x24	M12 x24	M12 x28	M16 x36	M16 x36
S2 2)	-	M12 x24	-	M12 x28	-
A3	122	134	144	155	170
B3	66	66	66	75	83
C3	23.8	23.8	23.8	27.8	31.8
D3	M12	M12	M12	M16	M16
E3	30	30	35	40	45
F3	33	33	38	43	49
G3	136.5	137	154	172.5	179
H3	23.5	30.5	30.5	30.5	38.5
J3	24	24	28	36	36
K3	50.8	50.8	50.8	57.2	66.7
L3	18	20	20	20	22
T3	-	-	-	-	68

1) Spline shaft type D
2) Spline shaft type Z
3) Max operating pressure 350 bar

Ports	F12-30	F12-40	F12-60	F12-80 F12-90	F12-110 F12-125
A, B size	3/4"	3/4"	3/4"	1"	1 1/4"
Screw thread*)	M10 x20	M10 x20	M10 x20	M12 x20	M14 x26
C thread**)	M22 x1.5	M22 x1.5	M22 x1.5	M22 x1.5	M22 x1.5
D thread**)	M18 x1.5	M18 x1.5	M22 x1.5	M22 x1.5	M22 x1.5
E thread	-	-	-	-	M22 x1.5

A, B: ISO 6162 *) Metric thread x depth in mm
**) Metric thread x pitch in mm.

Spline shaft (DIN 5480)

	Type **D** (std)	Type **A**	Type **Z** (optional)
F12-30	W30x2x14x9g	-	W25x1.25x18x9g 3)
-40	W32x2x14x9g	W35x2x16x9g	W30x2x14x9g
-60	W35x2x16x9g	-	W32x2x14x9g
-80	W40x2x18x9g	-	W35x2x16x9g 3)
-90	W40x2x18x9g	-	W35x2x16x9g 3)
-110	W45x2x21x9g	-	W40x2x18x9g 3)
-125	W45x2x21x9g	-	W40x2x18x9g 3)

Key shaft

	Type **K** (std)	Type **P** (opt.)	Type **J** (opt.)	Type **V** (opt.)
F12-30	Ø30	Ø25 3)	-	32-3
-40	Ø30	-	Ø35	38-3
-60	Ø35	-	-	44-3
-80	Ø40	-	-	-
-90	Ø40	-	-	-
-110	Ø45	-	-	44-3
-125	Ø45	-	-	44-3

www.kovez.cz

F12-30, -40, -60, -80, -90, -110 and -125
(Cartridge versions)

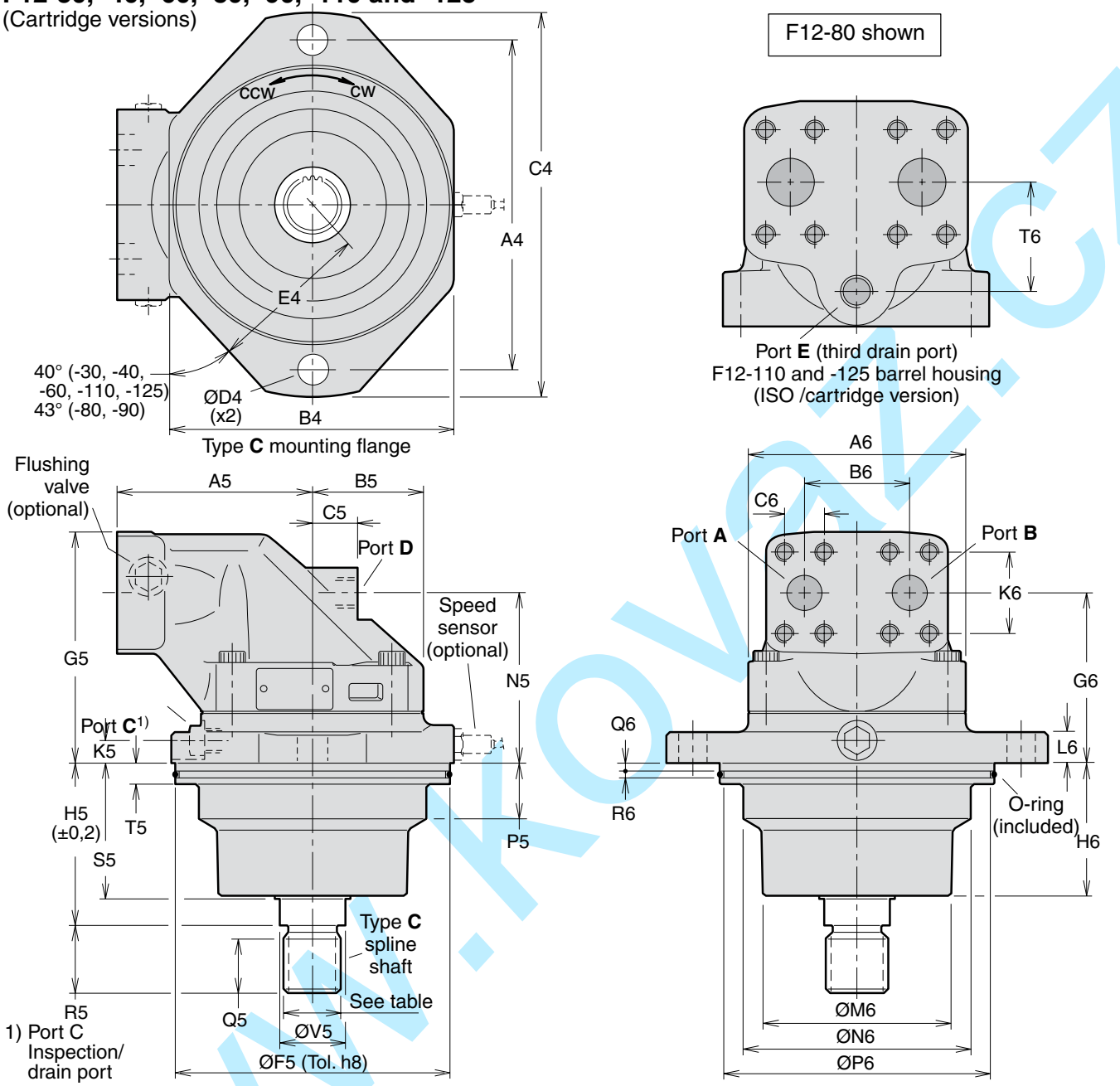

Shaft option K (J)

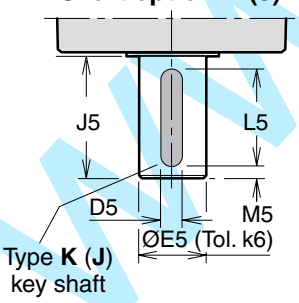

Shaft option V (F12-30)

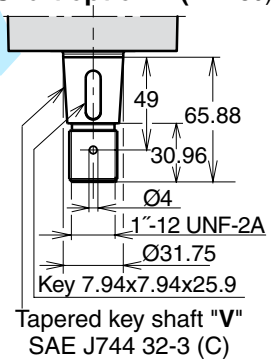

Shaft option V (F12-40)

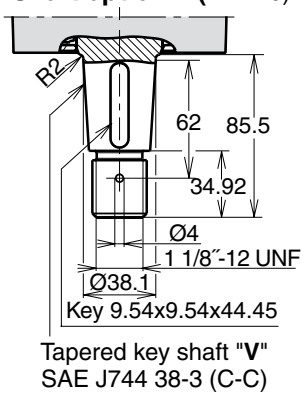

Shaft option V (F12-60)

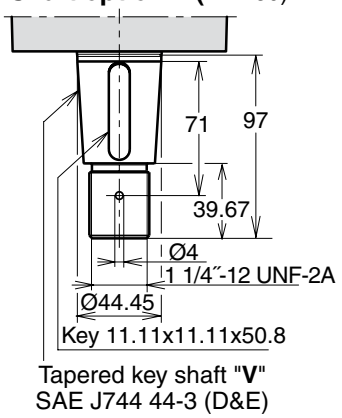

www.kovaz.cz

Dim.	F12-30	F12-40	F12-60	F12-80 F12-90	F12-110 F12-125
A4	160	200	200	224	250
B4	140	164	164	196	206
C4	188	235	235	260	286
D4	14	18	18	22	22
E4	77	95	95	110	116
A5	100	110	125	135	145
B5	59	65	70	77.5	85
C5	25	26	22	32	38
D5	8	8 1) 10 2)	10	12	14
E5	30	30 1) 35 2)	35	40	45
F5	135	160	160	190	200
G5	127	133	146	157	175
H5	89	92.3	92.3	110.5	122.8
J5	50	60	60	70	82
K5	14	16	15	15	15
L5	40	50	50	56	70
M5	5	5	5	7	6
N5	91	97	110	114	123
P5	22	30	31	40	40
Q5	28	28	28	37	37
R5	35	35	35	45	45
S5	70.5	72	76	91	95.7
T5	15	15	15	15	15
V5	32	35	35	45	45
A6	122	134	144	155	170
B6	66	66	66	75	83
C6	23.8	23.8	23.8	27.8	31.8
G6	91.5	97	110	114	123
H6	69.5	71	74	89.5	93.7
K6	50.8	50.8	50.8	57.2	66.7
L6	16	18	18	20	20
M6	92	115	115	130	140
N6	110	127	135	154	160
P6	128.2	153.2	153.2	183.2	193.2
Q6	5	5	5	5	5
R6	5	5	5	5	5
T6	-	-	-	-	68

1) Key shaft type **K**
2) Key shaft type **J** (opt.).

Ports	F12-30	F12-40	F12-60	F12-80 F12-90	F12-110 F12-125
A, B size	$^3/_4$"	$^3/_4$"	$^3/_4$"	1"	$1^1/_4$"
Screw thread	M10 x20	M10 x20	M10 x20	M12 x22	M14 x26
C thread	M14 x1.5	M14 x1.5	M14 x1.5	M14 x1.5	M14 x1.5
D, E thread	M18 x1.5	M18 x1.5	M22 x1.5	M22 x1.5	M22 x1.5

A, B: ISO 6162

3

Spline shaft (DIN 5480)

	Type **C** (standard)	Type **B** (optional)
F12-30	W30x2x14x9g	-
-40	W30x2x14x9g	-
-60	W30x2x14x9g	W35x2x16x9g
-80	W40x2x18x9g	-
-90	W40x2x18x9g	-
-110	W40x2x18x9g	W45x2x21x9g
-125	W40x2x18x9g	W45x2x21x9g

Key shaft

	Type **K** (std)	Type **J** (opt.)	Type **V** (opt.)
F12-30	Ø30	-	32-3
-40	Ø30	Ø35	38-3
-60	Ø35	-	44-3
-80	Ø40	-	-
-90	Ø40	-	-
-110	Ø45	-	44-3
-125	Ø45	-	44-3

O-ring dimensions	
F12-30	127x4
-40	150x4
-60	150x4
-80	180x4
-90	180x4
-110	190x4
-125	190x4

www.kovoz.cz

F12-30, -40, -60, -80, -90, -110 and -125

(SAE versions with 4 bolt flange)

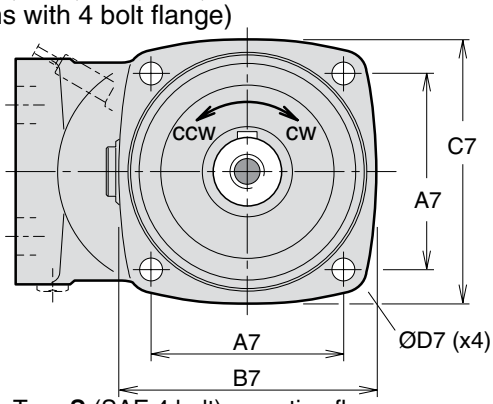

Type **S** (SAE 4 bolt) mounting flange

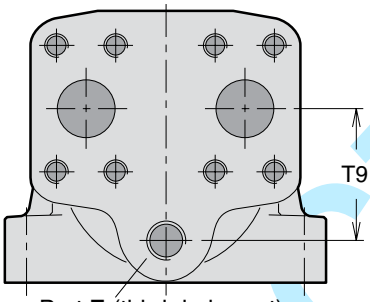

Port **E** (third drain port)
F12-110 and -125 barrel housing
(SAE version)

Shown: F12-80 with 4 bolt flange

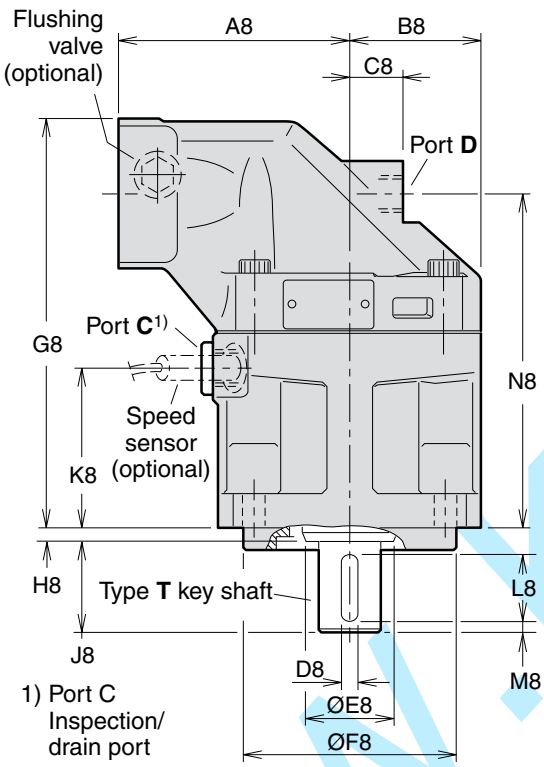

1) Port C
Inspection/
drain port

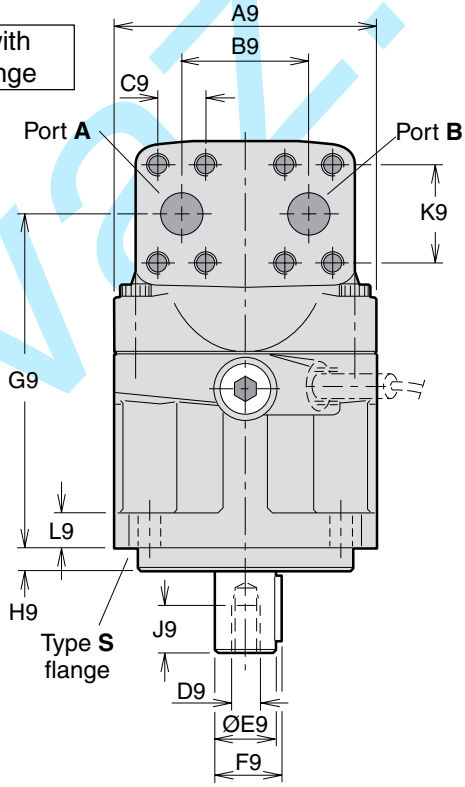

Shaft option S (U)

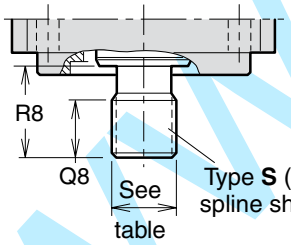

Shaft option V (F12-30)

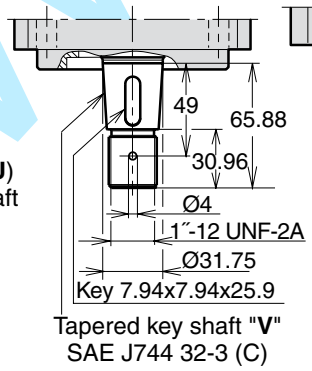

Tapered key shaft "**V**"
SAE J744 32-3 (C)

Shaft option V (F12-40)

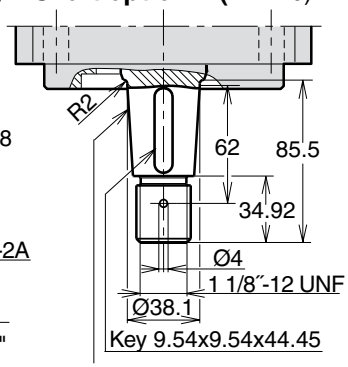

Tapered key shaft "**V**"
SAE J744 38-3 (C-C)

Shaft option V (F12-60)

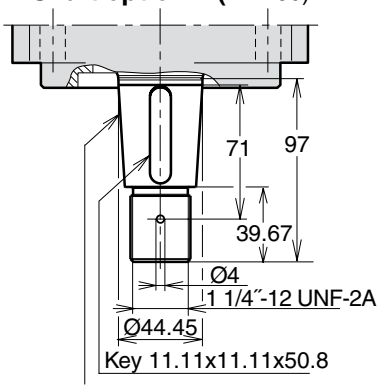

Tapered key shaft "**V**"
SAE J744 44-3 (D&E)

www.kovaz.cz

Dim.	F12-30	F12-40	F12-60	F12-80 F12-90	F12-110 F12-125
A7	89.8	114.5	114.5	114.5	161.6
B7	118	148	148	155	204
C7	118	144	144	155	200
D7	14	14	14	14	21
A8	100	110	125	135	145
B8	59	65	70	77.5	85
C8	25	26	22	32	38
D8	6.35	7.94	7.94	9.53	11.1
E8	33	42	42	52	57.5
F8	101.60/ 101.55	127.00/ 126.94	127.00/ 126.94	127.00/ 126.94	152.40/ 152.34
G8	189.5	197	214	240	264
H8	8	8	8	8	8
J8	38	48	48	54	67
K8	72	76	79	95	99
L8	31.8	38.1	38.1	44.5	54.1
M8	2.5	4	4	4	7.5
N8	153.5	161	178.3	197.1	212
Q8 1)	23	23	23	25	34
Q8 2)	-	-	-	23	-
R8 1)	33	48	48	54	66.7
R8 2)	-	-	-	48	-
A9	122	134	144	155	170
B9	66	66	66	75	83
C9	23.8	23.8	23.8	27.8	31.8
D9*	$^5/_{16}$"-24	$^3/_8$"-24	$^3/_8$"-24	$^1/_2$"-20	$^5/_8$"-18
E9	25.40/ 25.35	31.75/ 31.70	31.75/ 31.70	38.10/ 42.3	44.45/ 49.4
F9	28.2	35.3	35.3	42.3	49.4
G9	153.8	161	178.3	197.1	212
H9	9.7	12.7	12.7	12.7	12.7
J9	16	19	19	26	32
K9	50.8	50.8	50.8	57.2	66.7
L9	18	20	20	20	22
T9	-	-	-	-	68

* UNF-2B thread
1)Spline shaft type **S**
2)Spline shaft type **U**
3)Max operating pressure 350 bar

Main ports A and B, type U (optional)	
F12-30	1 $^1/_{16}$" - 12 UN3)
F12-40	1 $^5/_{16}$" - 12 UN3)
F12-60	1 $^5/_{16}$" - 12 UN3)
F12-80	1 $^5/_{16}$" - 12 UN3)
F12-90	1 $^5/_{16}$" - 12 UN3)
F12-110	1 $^5/_8$" - 12 UN3)
F12-125	1 $^5/_8$" - 12 UN3)

Ports	F12-30	F12-40	F12-60	F12-80 F12-90	F12-110 F12-125
A, B size	$^3/_4$"	$^3/_4$"	$^3/_4$"	1"	1$^1/_4$"
Screw thread**)	$^3/_8$"-16 x22	$^3/_8$"-16 x20	$^3/_8$"-16 x22	$^7/_{16}$"-14 x27	$^1/_2$"-13 x25
C thread	$^7/_8$"-14	$^7/_8$"-14	$^7/_8$"-14	$^7/_8$"-14	1$^1/_{16}$"-12
D thread	$^3/_4$"-16	$^3/_4$"-16	$^7/_8$"-14	$^7/_8$"-14	1$^1/_{16}$"-12
E thread	-	-	-	-	1$^1/_{16}$"-12

A, B: ISO 6162 C, D, E: O-ring boss (SAE J514)
**) UN thread x depth in mm.

Mounting flange (SAE J744)

	S (standard)	**R** (optional)
F12-30	SAE 'B', 4 bolt	-
-40	SAE 'C', 4 bolt	-
-60	SAE 'C', 4 bolt	-
-80	SAE 'C', 4 bolt	SAE 'D', 4 bolt
-90	SAE 'C', 4 bolt	SAE 'D', 4 bolt
-110	SAE 'D', 4 bolt	-
-125	SAE 'D', 4 bolt	-

Spline shaft (SAE J498b, class 1, flat root, side fit)

	S (standard)	**U** (opt.)	**F** (optional)
F12-30	SAE 'B' 13T, 16/32 DP	-	-
-40	SAE 'C' 14T, 12/24 DP	-	-
-60	SAE 'C' 14T, 12/24 DP	-	-
-80	SAE 'C-C' 17T, 12/24 DP	SAE 'C' 14T,12/24DP3)	SAE 'D' 13T, 8/16 DP
-90	SAE 'C-C' 17T, 12/24 DP	SAE 'C' 14T,12/24DP3)	SAE 'D' 13T, 8/16 DP
-110	SAE 'D' 13T, 8/16 DP	-	-
-125	SAE 'D' 13T, 8/16 DP	-	-

Key shaft (SAE J744)

F12	**T** (standard)	**R** (optional)	**V** (optional)
-30	SAE 'B-B' (Ø25.4 mm/1")	-	32-3
-40	SAE 'C' (Ø31.75 mm/1$^1/_4$")	-	38-3
-60	SAE 'C' (Ø31.75 mm/1$^1/_4$")	-	44-3
-80	SAE 'C-C' (Ø38.1 mm/1$^1/_2$")	SAE 'D' (Ø44.45 mm/1$^3/_4$")	-
-90	SAE 'C-C' (Ø38.1 mm/1$^1/_2$")	SAE 'D' (Ø44.45 mm/1$^3/_4$")	-
-110	SAE 'D' (Ø44.45 mm/1$^3/_4$")	-	44-3
-125	SAE 'D' (Ø44.45 mm/1$^3/_4$")	-	44-3

www.kcv.cz

Parker Hannifin
Pump & Motor Division Europe
Trollhättan, Sweden

F12-30, -40, and -60
(SAE versions with 2 bolt flange)

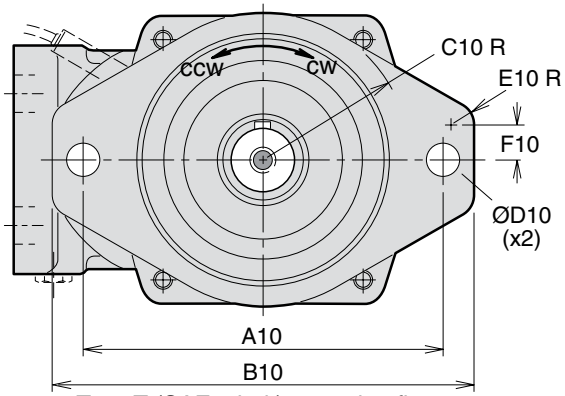

Type **T** (SAE 2 bolt) mounting flange

Shown: F12-60 with 2 bolt flange

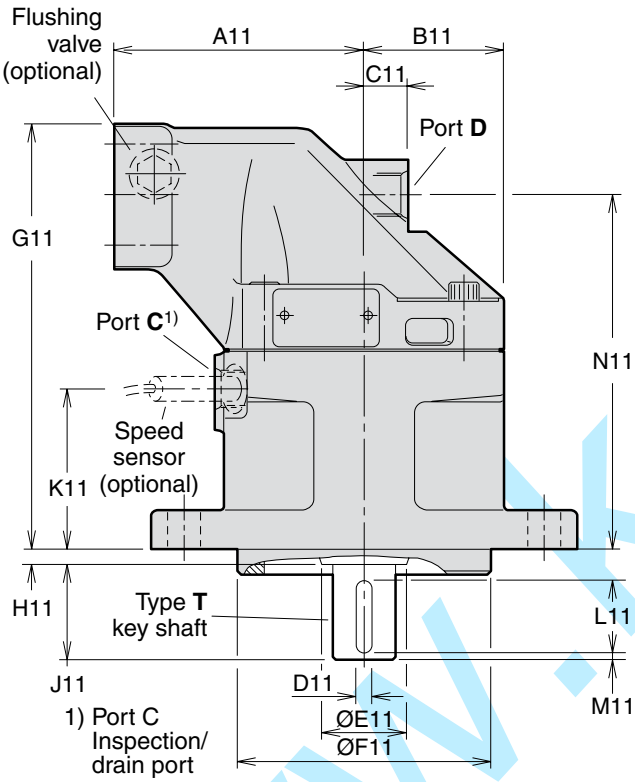

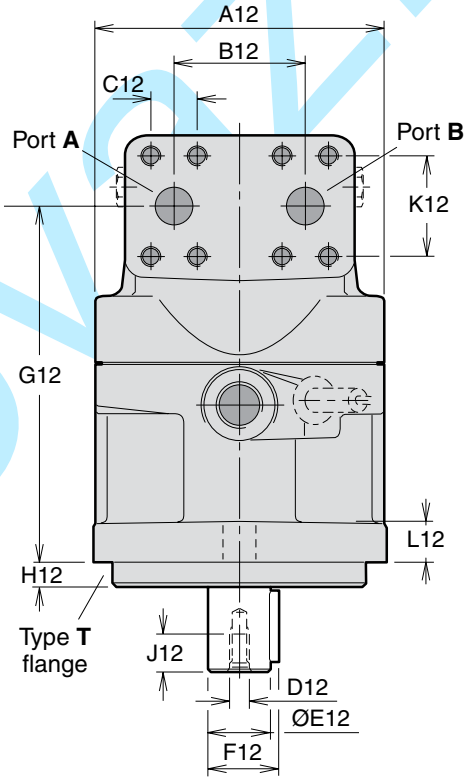

Shaft option S

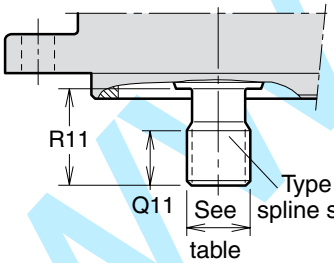

Shaft option V (F12-30)

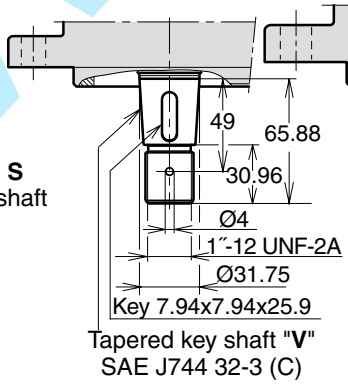

Shaft option V (F12-40)

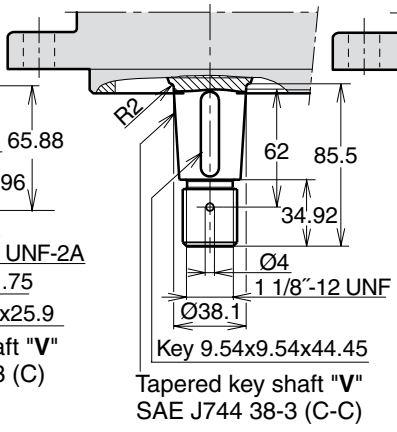

Shaft option V (F12-60)

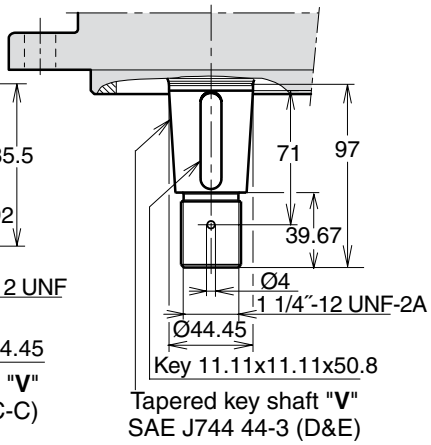

www.kovaz.cz

Dim.	F12-30	F12-40	F12-60
A10	146	181	181
B10	176	215	215
C10	63	74	74
D10	14.4	17.5	17.5
E10	10	16	16
F10	10	15.5	15.5
A11	100	110	125
B11	59	65	70
C11	25	26	22
D11	6.35	7.94	7.94
E11	33	42	42
F11	101.60/ 101.55	127.00/ 126.95	127.00/ 126.95
G11	189.5	197	214
H11	8	8	8
J11	38	48	48
K11	71	77	81.5
L11	31.8	38.1	38.1
M11	2.5	4	4
N11	154	161	178.5
Q11	26	27	27
R11	33	48	48
A12	122	134	144
B12	66	66	66
C12	23.8	23.8	23.8
D12[1)]	$^5/_{16}$"-24	$^3/_8$"-24	$^3/_8$"-24
E12	25.40/ 25.35	31.75/ 31.70	31.75/ 31.70
F12	28.2	35.2	35.2
G12	154	161	178.5
H12	9.7	12.7	12.7
J12	16	19	19
K12	50.8	50.8	50.8
L12	18	20	20

1) UNF-2B thread
6) Max operating pressure 350 bar

Ports	F12-30	F12-40	F12-60
A, B size	19 ($^3/_4$")	19 ($^3/_4$")	19 ($^3/_4$")
Screw thread *)	$^3/_8$"-16 x22	$^3/_8$"-16 x20	$^3/_8$"-16 x22
C thread	$^3/_4$"-16	$^3/_4$"-16	$^7/_8$"-14
D thread	$^3/_4$"-16	$^3/_4$"-16	$^7/_8$"-14

A, B (main ports): SAE J518c (6000 psi)
C, D (drain ports): O-ring boss (SAE J514)
*) UN thread

Main ports A and B, type U (optional)	
F12-30	1 $^1/_{16}$" - 12 UN[6)]
-40	1 $^5/_{16}$" - 12 UN[6)]
-60	1 $^5/_{16}$" - 12 UN[6)]

O-ring ports according to SAE J514d

Mounting flange T (SAE J744)	
F12-30	SAE 'B', 2 bolt
-40	SAE 'C', 2 bolt
-60	SAE 'C', 2 bolt

Spline shaft S (SAE J498b, class 1, flat root, side fit)	
F12-30	SAE 'B' 13 T; 16/32 DP
-40	SAE 'C' 14 T; 12/24 DP
-60	SAE 'C' 14 T; 12/24 DP

Key shaft (SAE J744)

	T (Standard)	**V** (optional)
F12-30	SAE 'B-B' Ø25.4 mm/1"	32-3
-40	SAE 'C' Ø31.75 mm/1$^1/_4$"	38-3
-60	SAE 'C' Ø31.75 mm/1$^1/_4$"	44-3

www.kovaz.cz

F12-150
(CETOP version)

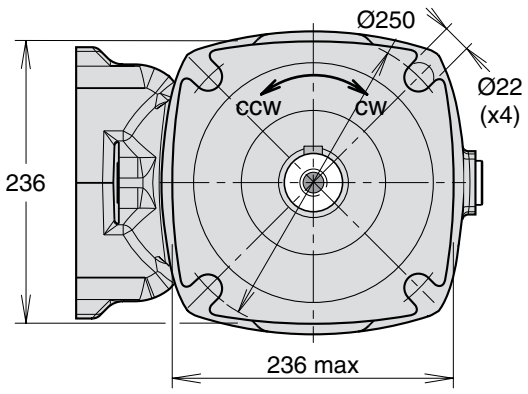

Type **C** mounting flange

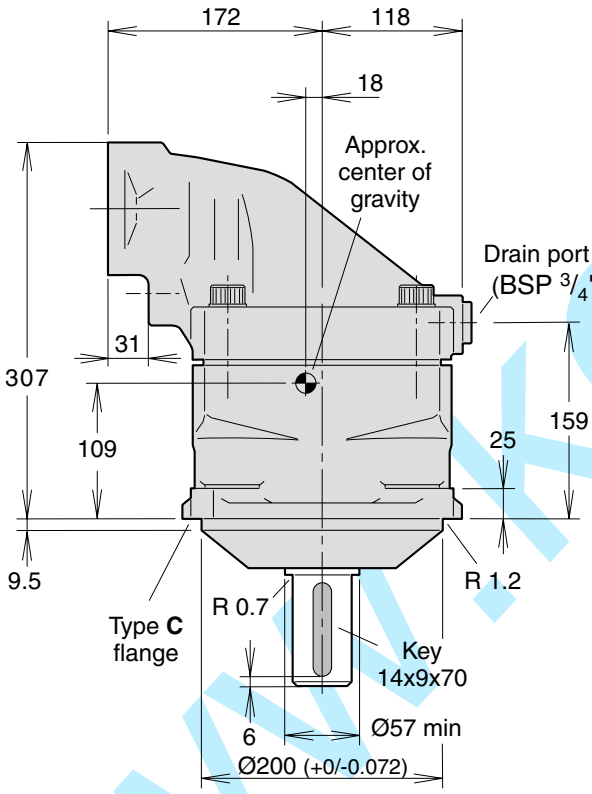

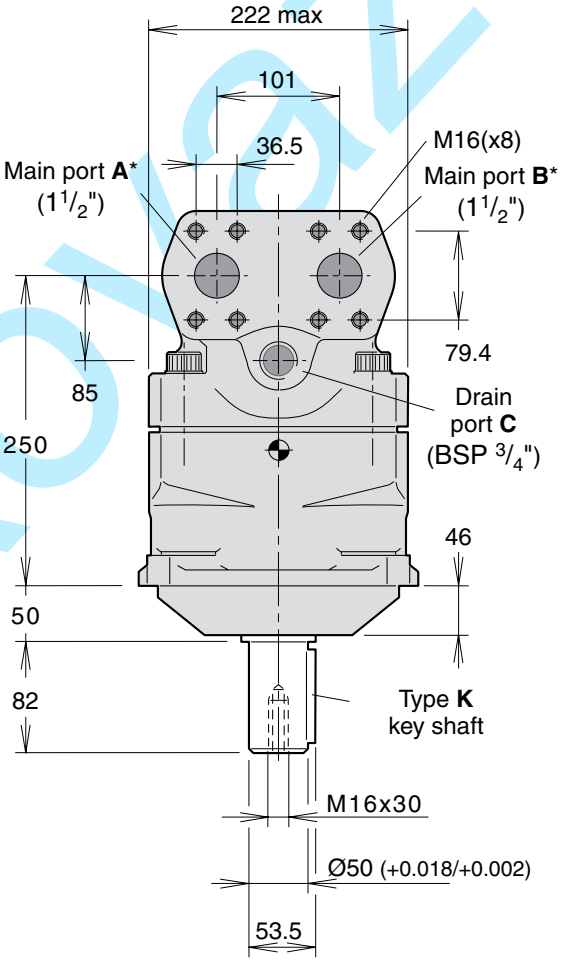

* 6000 psi flange (SAE J581c)

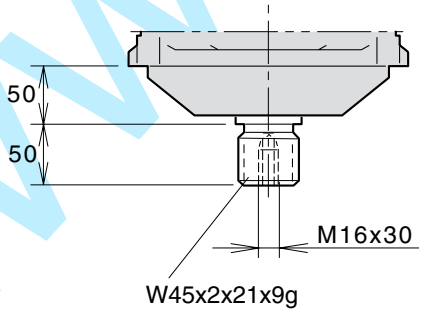

Type **D** spline shaft (DIN 5480)

www.kovaz.cz

F12-150
(SAE version)

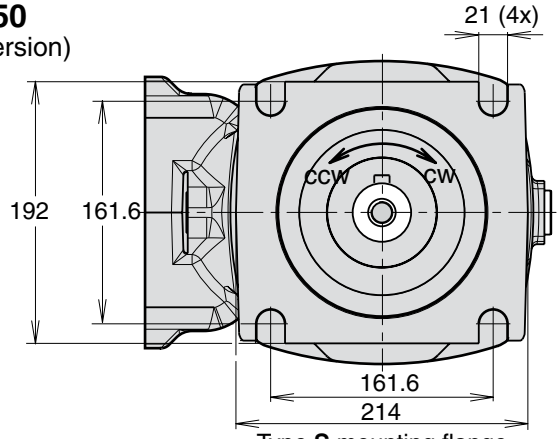

Type **S** mounting flange
SAE 'D' (SAE J744c)

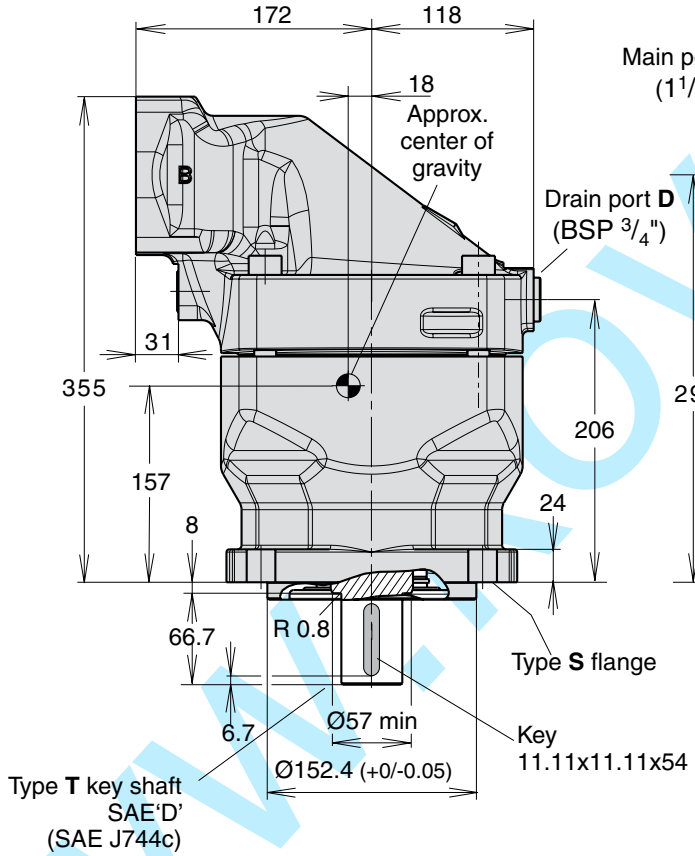

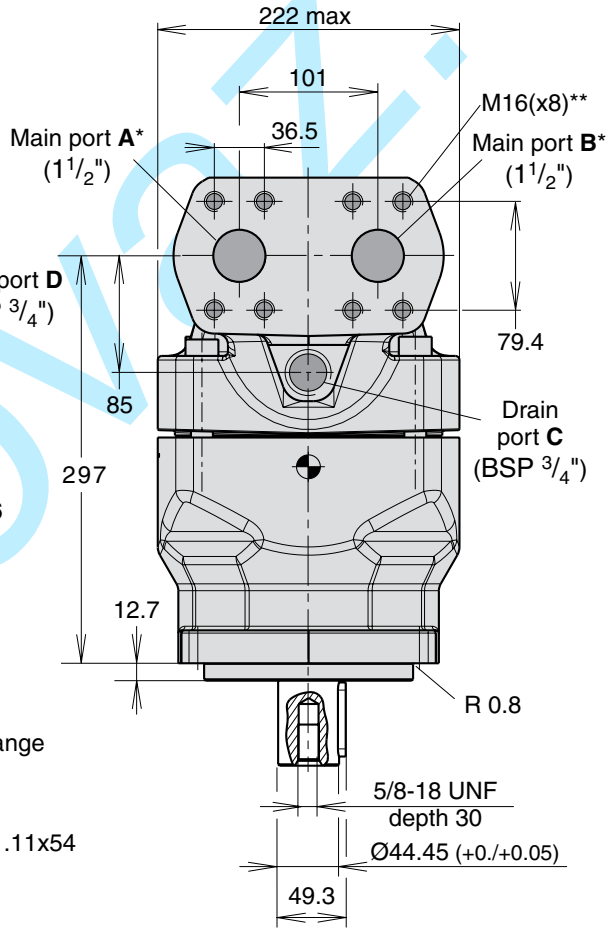

* 6000 psi flange (SAE J581c)

Shaft option S

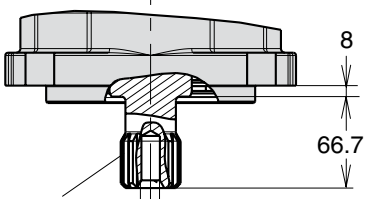

SAE 'D'; 13T, 8/16 DP;
class 1, flat root, side fit
Type **S** spline shaft (SAE J498b)

5/8-11 UNC
depth 35

Shaft option F

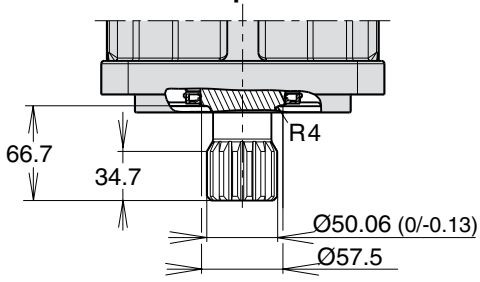

Type **F** spline shaft
SAE J498b, class 1;
15T-8/16 DP; fillet root, side fit

www.rovoz.cz

F12-250
(SAE version)

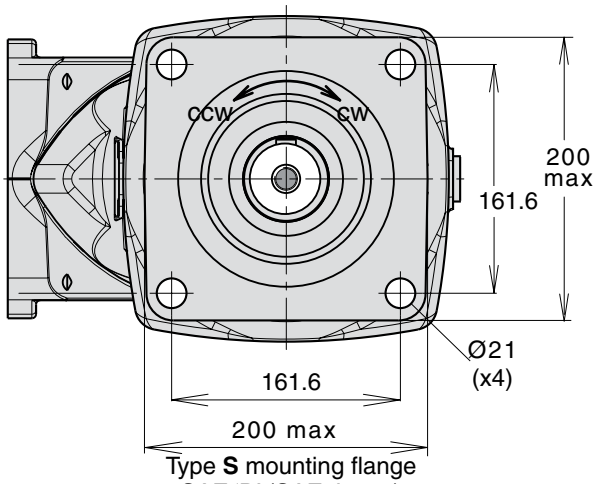

Type **S** mounting flange
SAE 'D' (SAE J744c)

* 6000 psi flange (SAE J518c)

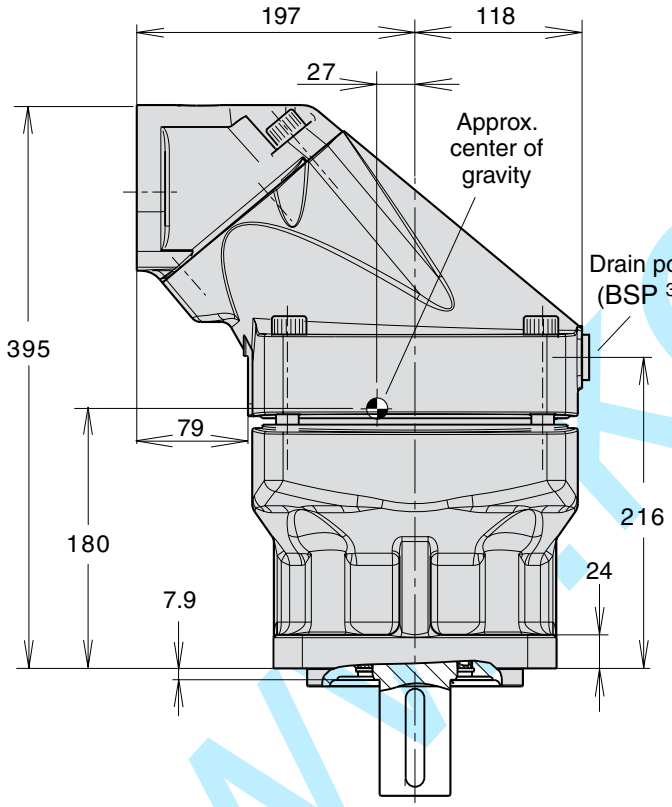

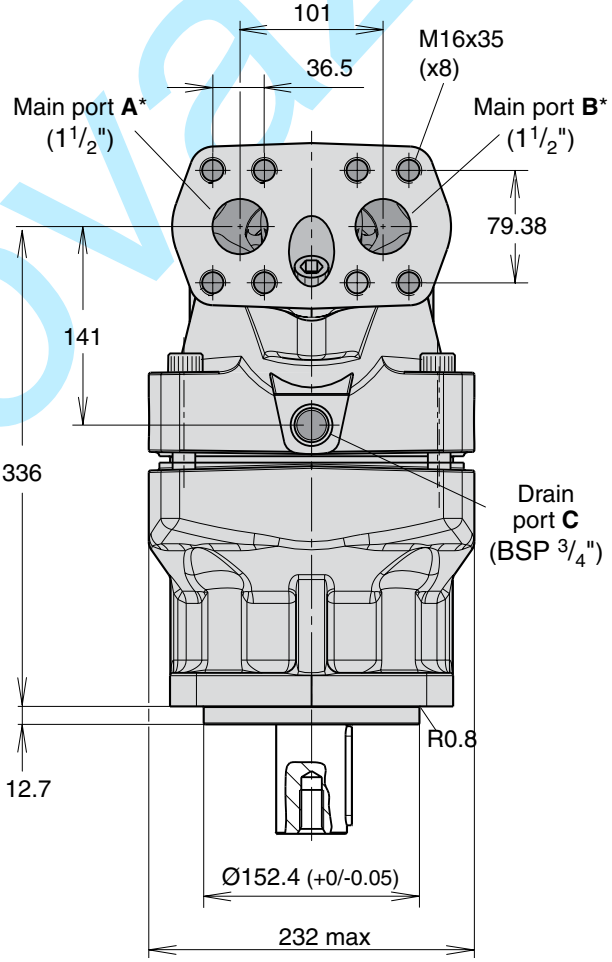

www.kovaz.cz

F12-250 Options (SAE version)

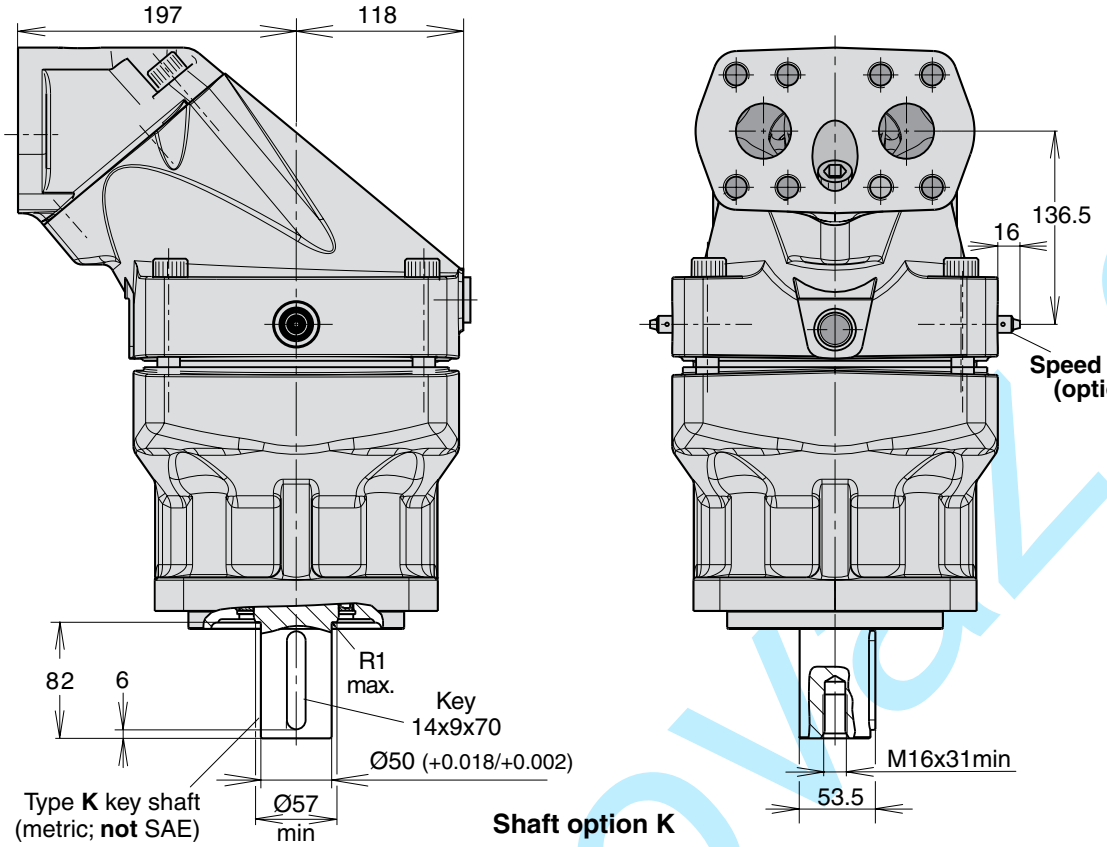

Shaft option K

Shaft option T

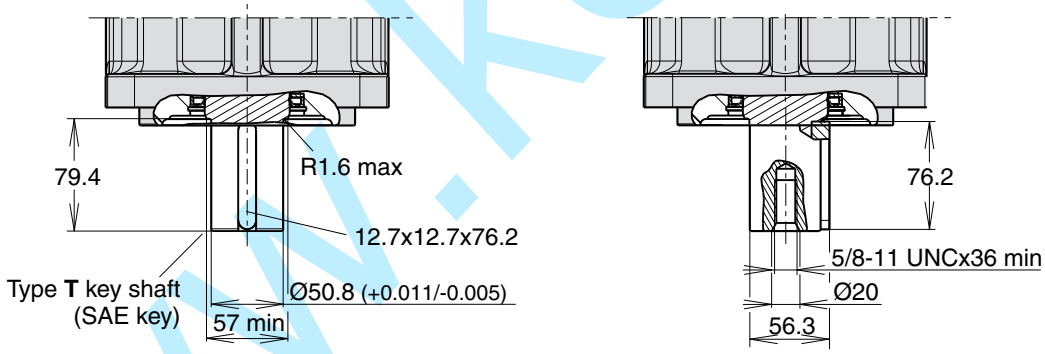

Shaft option D

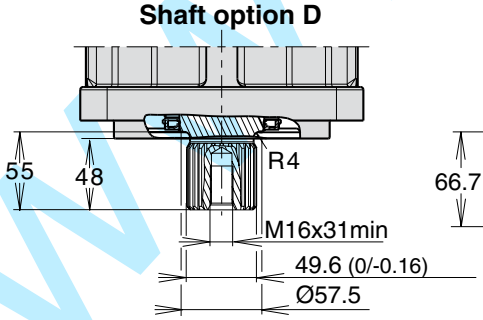

Type **D** spline shaft
W50x2x24x9g
DIN 5480 side fit

Shaft option F

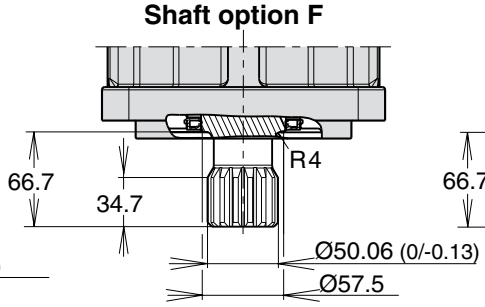

Type **F** spline shaft
SAE J498b, class 1;
15T-8/16 DP;
fillet root, side fit

Shaft option S

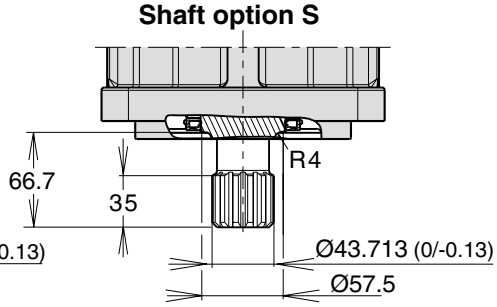

Type **S** spline shaft
SAE J498b, class 1;
30° involute spline;
13T-8/16 DP;
flat root, side fit

www.kovaz.cz