AOEG Elbow

Male UN/UNF thread O-ring (ISO 11926) / Female NPTF thread (SAE 476)

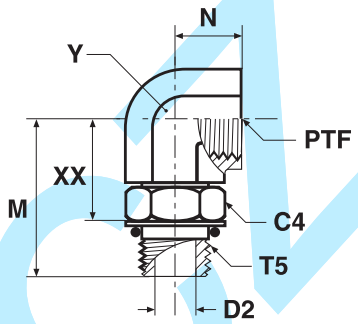

Thread UN/UNF-2A T5	Thread NPTF/NPTF PTF	C4 mm	D2 mm	M mm	N mm	XX mm	Y mm	Weight (steel) g/1 piece	Adapter Steel	PN (bar)
9/16-18	1/4-18	18	7.5	34	16	21	19	86	**6-1/4 AOEG-S**	350
3/4-16	3/8-18	22	9.9	37	16	24	22	100	**8-3/8 AOEG-S**	310
7/8-14	1/2-14	25	12.3	46	19	31	27	172	**10-1/2 AOEG-S**	210
1 1/16-12	3/4-14	32	15.5	51	21	34	33	274	**12-3/4 AOEG-S**	210
1 5/16-12	1-11.5	38	21.4	57	25	40	41	471	**16-1 AOEG-S**	125

Do not create drawings from these dimensions, they are subject to change and ISO manufacturing allowances.

AOE4G Extra long elbow

Male UN/UNF thread O-ring (ISO 11926) / Female NPTF thread (SAE 476)

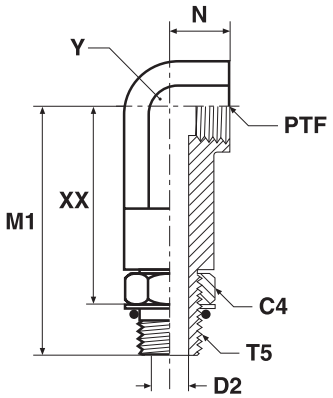

Thread UN/UNF-2A T5	Thread NPTF/NPTF PTF	C4 mm	D2 mm	M1 mm	N mm	XX mm	Y mm	Weight (steel) g/1 piece	Adapter Steel	PN (bar)
3/4-16	3/8-18	22	9.9	75	16	62	22.0	176	**8-3/8 AOE4G-S**	310
7/8-14	1/2-14	25	12.3	90	19	76	27.0	246	**10-1/2 AOE4G-S**	210
1 1/16-12	3/4-14	32	15.5	103	21	86	33.3	356	**12-3/4 AOE4G-S**	210
1 5/16-12	1-11.5	38	21.4	118	25	101	41.0	956	**16-1 AOE4G-S**	125

Parker Adapter are delivered with NBR elastomeric seals as standard. For more details on other seal materials see page O60.

Order codes shown are part of our current manufacturing programme.

Imperial and metric parts may vary in hexagon dimensions.

$$\frac{\text{PN (bar)}}{10} = \text{PN (MPa)}$$

Do not create drawings from these dimensions, they are subject to change and ISO manufacturing allowances.