RMTX Male stud run tee

Triple-Lok® 37° Flare ends / Male NPTF* thread (SAE 476)
SAE 070424 MS51511
*Stainless Steel = NPT to prevent galling

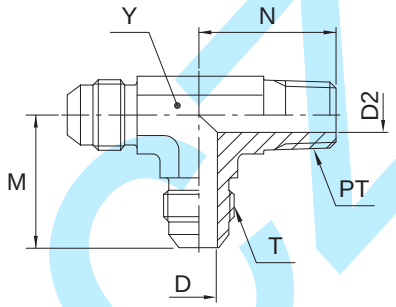

Tube O.D. mm	in.	Thread NPT/NPTF PT	Thread UN/UNF-2A T	D mm	D2 mm	M mm	N mm	Y mm	Weight (steel) g/1 piece	Triple-Lok® Steel	Triple-Lok® Stainless Steel	Triple-Lok® Brass	PN (bar) S	PN (bar) SS
	3/16	1/8-27	3/8-24	3.2	4.7	21	18	11.0	25	**3 RTX-S**	**3 RTX-SS**		420	350
6	1/4	1/8-27	7/16-20	4.4	4.7	23	20	11.0	31	**4 RTX-S**	**4 RTX-SS**	**4 RTX-B**	420	350
6	1/4	1/4-18	7/16-20	4.4	7.0	27	28	14.0	49	**4-4-4 RTX-S**	**4-4-4 RTX-SS**	**4-4-4 RTX-B**	420	350
8	5/16	1/8-27	1/2-20	6.0	4.7	24	20	14.0	37	**5 RTX-S**	**5 RTX-SS**	**5 RTX-B**	420	350
10	3/8	1/4-18	9/16-18	7.5	7.0	27	28	14.0	57	**6 RTX-S**	**6 RTX-SS**	**6 RTX-B**	420	350
10	3/8	3/8-18	9/16-18	7.5	10.3	29	31	19.0	77	**6-6-6 RTX-S**	**6-6-6 RTX-SS**	**6-6-6 RTX-B**	420	350
12	1/2	3/8-18	3/4-16	9.9	10.3	32	31	19.0	109	**8 RTX-S**	**8 RTX-SS**	**8 RTX-B**	420	350
12	1/2	1/2-14	3/4-16	9.9	13.5	34	37	22.0	163	**8-8-8 RTX-S**	**8-8-8 RTX-SS**	**8-8-8 RTX-B**	420	350
14, 15,16	5/8	1/2-14	7/8-14	12.3	13.5	37	37	22.0	172	**10 RTX-S**	**10 RTX-SS**	**10 RTX-B**	350	350
18, 20	3/4	3/4-14	1 1/16-12	15.5	18.3	42	40	27.0	268	**12 RTX-S**	**12 RTX-SS**	**12 RTX-B**	280	280
22	7/8	3/4-14	1 3/16-12	18.3	18.3	46	43	33.3	323	**14 RTX-S**			280	—
25	1	1-11.5	1 5/16-12	21.4	23.8	46	50	33.3	413	**16 RTX-S**	**16 RTX-SS**	**16 RTX-B**	210	210
28, 30, 32	1 1/4	1 1/4-11.5	1 5/8-12	27.4	31.8	52	60	41.0	681	**20 RTX-S**	**20 RTX-SS**	**20 RTX-B**	170	170
35, 38	1 1/2	1 1/2-11.5	1 7/8-12	33.3	38.0	59	67	47.6	905	**24 RTX-S**	**24 RTX-SS**		170	140

Order codes shown are part of our current manufacturing programme.

Imperial and metric parts may vary in hexagon dimensions.

$\frac{\text{PN (bar)}}{10} = \text{PN (MPa)}$

Pressure ratings – PN shown, apply to Steel and Stainless Steel versions of the product.

For Brass parts reduce pressures by 35 %.

Do not create drawings from these dimensions, they are subject to change and ISO manufacturing allowances.