The direct operated pressure relief valve series EVSA is a seated type valve for screw-in mounting. It is available in two sizes and three pressure stages.

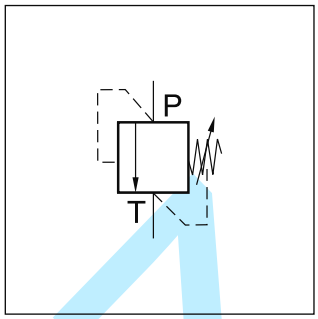

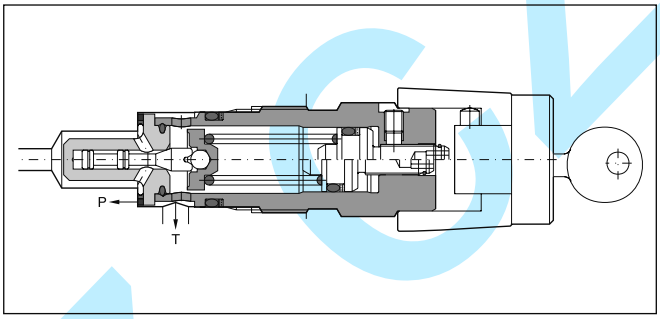

Function

When the pressure in port P exceeds the setting pressure the cone opens to port T and thus limits the pressure in port P to the adjusted level.

The integrated damping spool prevents pressure fluctuations in the transition region. The pressure is set by the adjusting screw, which is locked by the clamping screw. The setting can optionally be secured by a cylinder lock.

Features

- Seated type valve
- Screw-in mounting
- 3 pressure stages
- 2 adjustment modes:
  - screw with hexagon socket
  - cylinder lock

Note

The spring must be unloaded when the EVSA is screwed out of the manifold.

Ordering code

EVSA		A		1		
Pressure relief valve	**Pressure stages**	**Adjustment screw with hex. socket**	**Nominal size / thread type**	**FPM Seals**	**Design series** (not required for ordering)	**Lock**

Code	Pressure stages
064	**up to 64 bar**
160	**up to 160 bar**
315	**up to 315 bar**

Code	Lock
omit	**–**
Z	Cylinder lock

Code	Nominal size
06	**NG06, M28x1.5**
10	**NG10, M35x1.5**

Bold letters =
Short-term availability

Technical data

General			
Design		Direct operated relief valve, seated type	
Nominal size		**NG06**	**NG10**
Interface		Screw-in mounting	
Mounting position		unrestricted	
Ambient temperature	[°C]	-20...+60	
$MTTF_D$ value	[years]	150	
Weight	[kg]	0.3	0.45
Hydraulics			
Max. operating pressure	[bar]	Port P 315, Port T depressurized	
Pressure stages	[bar]	64, 160, 315	
Nominal flow	[l/min]	40 (NG06), 80 (NG10)	
Fluid		Hydraulic oil according to DIN 51524	
Fluid temperature	[°C]	-20…+70	
Viscosity permitted	[cSt] / [mm²/s]	20...400	
recommended	[cSt] / [mm²/s]	30...80	
Filtration		ISO 4406 (1999); 18/16/13	

EVSA UK.INDD RH 17.04.2015

kovaz.cz

4

Δp/Q performance curves

NG06 pressure stage 64 bar

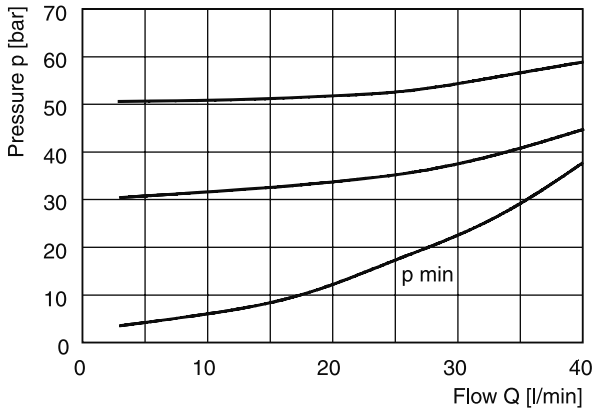

NG10 pressure stage 64 bar

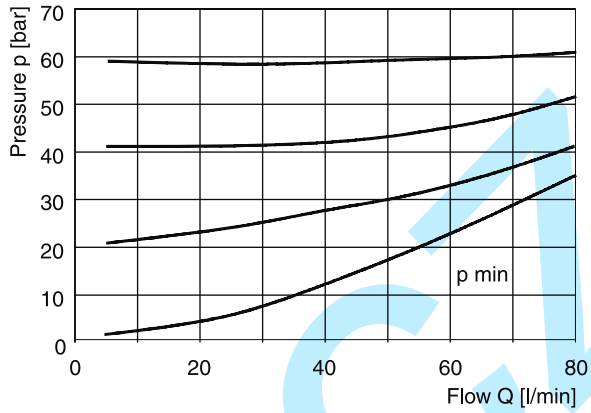

NG06 pressure stage 160 bar

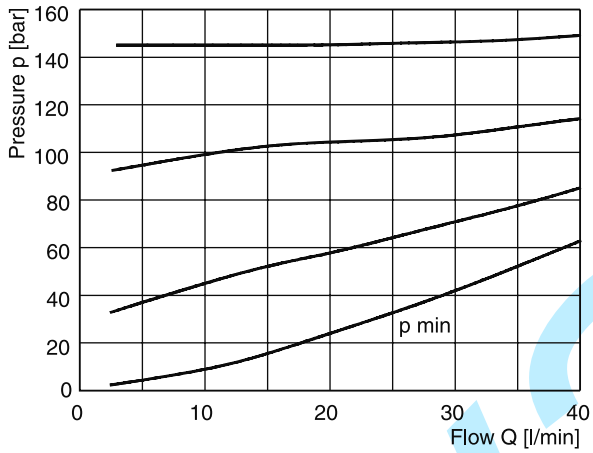

NG10 pressure stage 160 bar

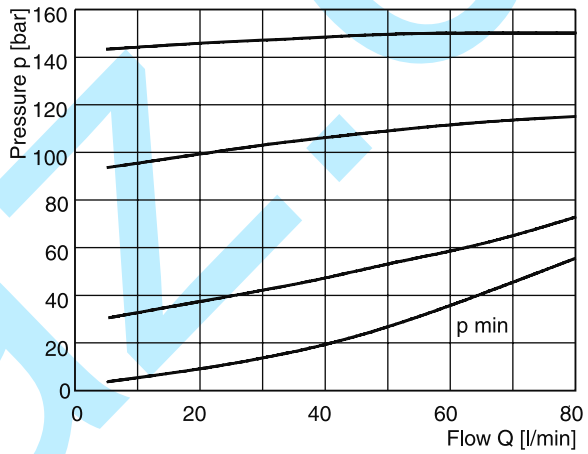

NG06 pressure stage 315 bar

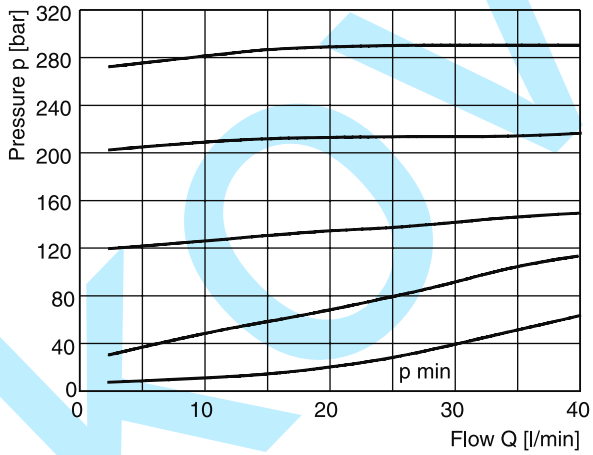

NG10 pressure stage 315 bar

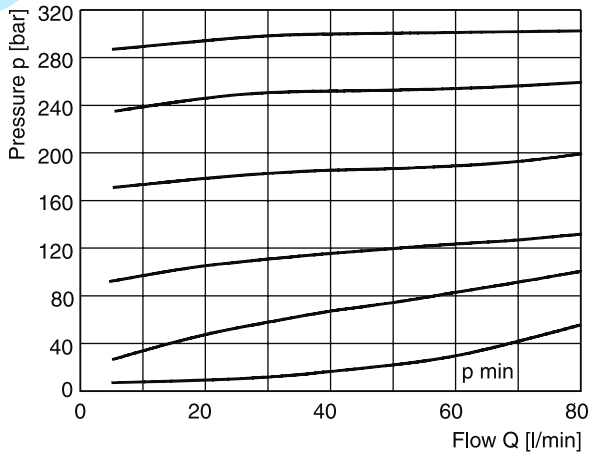

All characteristic curves measured with HLP46 at 50 °C.

kovaz.cz

NG06

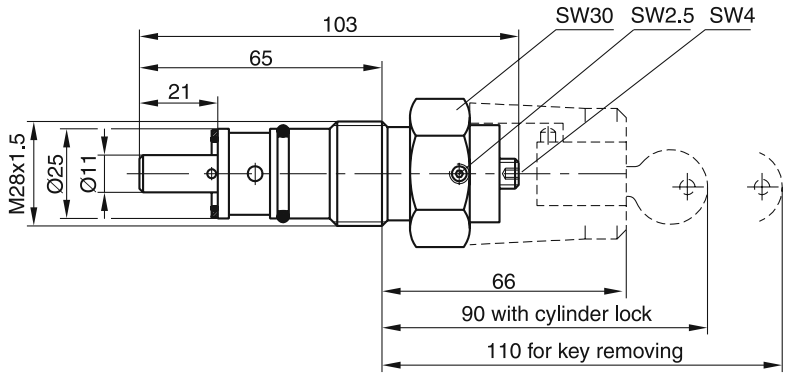

Kit
SK-EVSAA0613

NG10

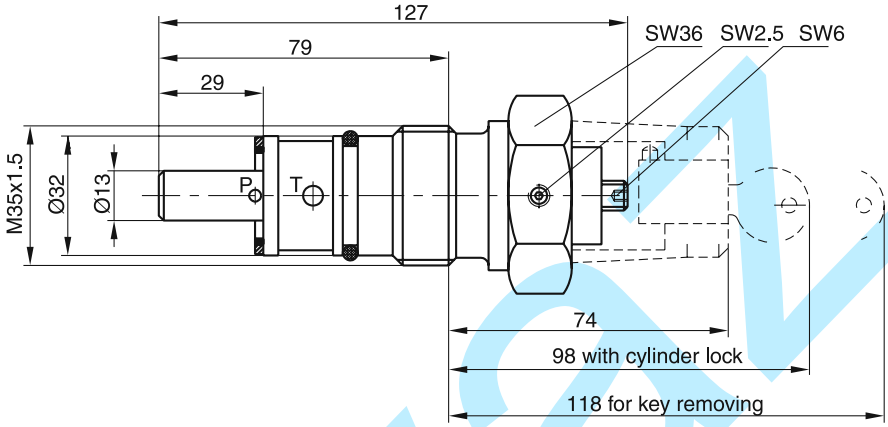

Kit
SK-EVSAA1013

Installation dimensions

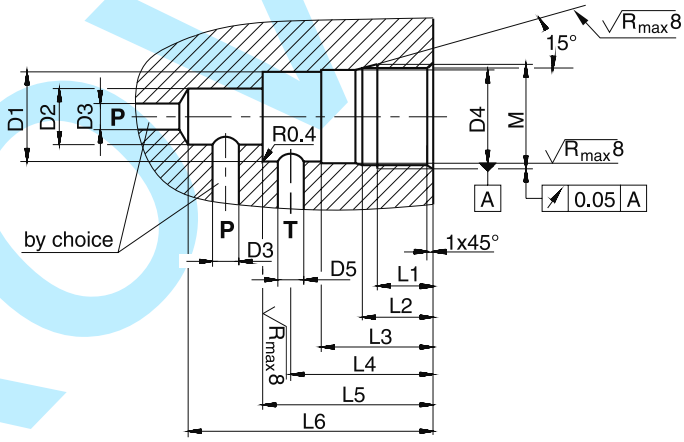

Tightening torque [Nm] ±5 %		
Pressure stages	NG06	NG10
064, 160	50	100
315	80	150

Size	M	D_1	D_2	D_3	D_4	D_5	L_1	L_2	L_3	L_4	L_5	L_6
NG06	M28 x 1.5	Ø24.8	Ø15	Ø6.8	$Ø25^{H9}$	Ø6.8	15	19	30	35	45	65
NG10	M35 x 1.5	Ø31.8	Ø18.5	Ø10	$Ø32^{H9}$	Ø10	18	23	35	41 - 46	52	80

EVSA UK.INDD RH 17.04.2015

kovaz.cz