CLO Male stud elbow

O-Lok® ORFS tube end / Male NPTF* thread (SAE J476)
*Stainless Steel = NPT to prevent galling

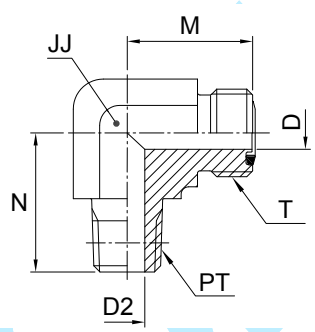

Tube O.D. mm	Tube O.D. in.	Thread NPTF PT	Thread UN/UNF-2A T	D mm	D2 mm	JJ* mm	M mm	N mm	Weight (steel) g/1 piece	O-Lok® Steel	O-Lok® Stainless Steel	PN (bar) S	PN (bar) SS
6	1/4	1/8-27	9/16-18	4.5	4.8	14	22	20	39	**4 CLO-S**	**4 CLO-SS**	420	420
6	1/4	1/4-18	9/16-18	4.5	7.1	14	22	28	50	**4-4 CLO-S**	**4-4 CLO-SS**	420	420
8, 10	3/8	1/4-18	11/16-16	6.5	7.1	19	25	28	75	**6 CLO-S**	**6 CLO-SS**	420	420
8, 10	3/8	3/8-18	11/16-16	6.5	10.3	19	25	31	81	**6-6 CLO-S**	**6-6 CLO-SS**	420	420
8, 10	3/8	1/2-14	11/16-16	6.5	13.5	22	29	37	84	**6-8 CLO-S**	**6-8 CLO-SS**	420	420
12	1/2	3/8-18	13/16-16	9.5	10.3	19	28	31	89	**8 CLO-S**	**8 CLO-SS**	420	420
12	1/2	1/2-14	13/16-16	9.5	13.5	22	28	37	125	**8-8 CLO-S**	**8-8 CLO-SS**	420	420
12	1/2	3/4-14	13/16-16	9.5	18.3	27	34	40	168	**8-12 CLO-S**	**8-12 CLO-SS**	280	280
14, 15, 16	5/8	1/2-14	1-14	12.5	13.5	27	33	37	154	**10 CLO-S**	**10 CLO-SS**	420	420
14, 15, 16	5/8	3/4-14	1-14	12.5	18.3	27	36	40	237	**10-12 CLO-S**	**10-12 CLO-SS**	280	280
18, 20	3/4	3/4-14	1 3/16-12	15.5	18.3	30	37	40	246	**12 CLO-S**	**12 CLO-SS**	280	280
18, 20	3/4	1/2-14	1 3/16-12	15.5	13.5	30	37	40	257	**12-8 CLO-S**	**12-8 CLO-SS**	420	420
18, 20	3/4	1-11.5	1 3/16-12	15.5	23.8	33	41	50	363	**12-16 CLO-S**	**12-16 CLO-SS**	210	210
25	1	1-11.5	1 7/16-12	20.5	23.8	36	42	50	387	**16 CLO-S**	**16 CLO-SS**	210	210
25	1	3/4-14	1 7/16-12	20.5	18.3	36	42	45	401	**16-12 CLO-S**	**16-12 CLO-SS**	280	280
28, 30, 32	1 1/4	1 1/4-11.5	1 11/16-12	26	31.8	41	45	61	469	**20 CLO-S**	**20 CLO-SS**	175	175
35, 38	1 1/2	1 1/2-11.5	2-12	32	38.1	48	49	67	603	**24 CLO-S**	**24 CLO-SS**	175	175

Product delivered with NBR TRAP seal. Replacement of TRAP seal is with a standard NBR O-ring – see page J74–J75.

Part numbers shown are part of our current manufacturing programme.

Imperial and metric parts may vary in hexagon dimensions.

$\frac{\text{PN (bar)}}{10} = \text{PN (MPa)}$

Do not create drawings from these dimensions, they are subject to change and ISO manufacturing allowances.
*JJ may vary in stainless steel