aerospace
climate control
electromechanical
filtration
fluid & gas handling
hydraulics
pneumatics
process control
sealing & shielding

# DA Series
# Diaphragm Accumulators

Previously known as ELM Series

Parker OLAER

ENGINEERING YOUR SUCCESS.

kovaz.cz

# Description

Diaphragm accumulators are inexpensive, compact and lightweight and are ideally suited where weight and space is an important consideration. Ideally suited to Mobile -Agricultural and Construction markets (140 to 350 bar/ 0.075 to 3.5L).

The DA diaphragm accumulator offers a reliable and efficient solution for storing energy under pressure and as an hydraulic spring. Utilizing comprehensive tools and resources including an applications database, CAD/CAM we offer an optimized design and performance membrane accumulator. (all hydraulic accumulators are compliant to 2014/68/EU regulation)

DA diaphragm accumulators (also referred to as membrane accumulators) are gas-loaded accumulators in which separation between the liquid and gas sides is achieved by a flexible diaphragm. They have a compact and lightweight design are available in 2 elastomer mixes; Nitrile and Hydrin (for low temperature working conditions) with a maximum pressure of 350bar (up to 2,8 liters) and volume of 3.5 Litres (up to 250 Bar).

DA accumulator range comes with a bonded seal (BS) fluid port with female or male and female fluid connection and M28x1,5 gas connection.

Accumulator accessories such as Safety Blocks, Clamps, Lock nut, Charging Sets (VGU), can aid the safe installation and operation of the accumulators in any hydraulic system.

Parker Olaer have developed very sophisticated simulation software to optimize sizing recommendations for hydraulic accumulators. You can download the accumulator sizing software from www.Parker.com/acde.

# Markets

- **Mobile**
- **Industrial**
- **Defense**
- **Energy**
- **Renewable**
- **Marine**
- **Mining**
- **Oil and Gas**
- **Rail**

# Features/Benefits

- **The adaption of a hydraulic shock absorber made up of a diaphragm accumulator improves driver comfort and offers immediate response times when driving over obstacles or rough terrain.**
- **The DA diaphragm accumulator offers a cost effective solution for hydraulic systems.**
- **The DA diaphragm accumulators are PED compliant and can be used in over 35 countries.**
- **The DA diaphragm accumulators offer high compression ratio (up to 8 – according to type)**
- **Low maintenance product**
- **We offer a wealth of product knowledge and experience thus enabling us to provide first class technical support and customer service.**

**E-configurable product**
**visit Parker.com/acde**

# Applications

- **Agricultural equipment**
- **Construction equipment**
- **Forestry**
- **Handling/Cranes**
- **Truck**
- **Wind Energy**
- **Hydraulic Power Units**
- **Lubrication Systems**
- **Power Generation**
- **Energy Transmission & Distribution**
- **Defence**
- **Air & Gas Compressors**
- **Entertainment Automation**
- **Moulding**
- **Plastic Presses**
- **Die Casting**
- **Vehicle Assembly Facilities**
- **Machine Tools**

Kovaz.cz

# DA Series Technical Characteristics

The technical characteristics are as follows:

**Minimum/maximum temperature allowable (° Celsius) :**
- 20/+80 for standard nitrile elastomers for models between 0.5 < V< 1.4 Litre
- 10/+80 for standard nitrile elastomers for models ≥ 2 Litres and < 0.32 Litre
- 35/+80 for hydrin elastomers

**Materials :** carbon steel, nitrile or hydrin diaphragm, for other constructions: please consult Parker.

This non-repairable accumulator comprises a shell electron beam welded in carbon steel or stainless steel, nitrile or hydrin diaphragm, for other constructions please consult Parker Olaer.

**Comparative cycle** for a tractor and its accessories in working conditions !

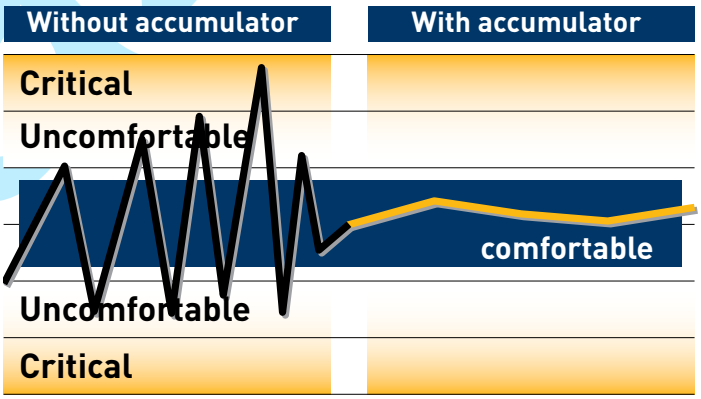

# DA Series: How to order a diaphragm accumulator

**DA - 140 - 140 90 A F 11 25 P000**

**Product Type**

| | |
|---|---|
| DA | Diaphragm Accumulators |

**Volume**

| | |
|---|---|
| 007 | 0,075L |
| 016 | 0.16L |
| 032 | 0.32L |
| 050 | 0.5L |
| 075 | 0.75L |
| 100 | 1L |
| 140 | 1.4L |
| 200 | 2L |
| 280 | 2.8L |
| 350 | 3.5L |

**Working Pressure**

| | |
|---|---|
| 100 | 100 bar |
| 140 | 140 bar |
| 210 | 210 bar |
| 250 | 250 bar |
| 350 | 350 bar |

**Approval**

| | |
|---|---|
| 00 | PED 2014/68/EU Art. 4.3 |
| 90 | EC (according to PED 2014/68/EU) |

**Fluid connection**

| | |
|---|---|
| A | G ½” |
| B | G ¾” |
| C | G ½” + External thread M33x1,5 |
| D | G ¾” + External thread M45x1,5 |

**Gas connection**

| | |
|---|---|
| F | M28x1,5 |

**Construction**

| | |
|---|---|
| 11 | Carbon steel shell |

**Membrane rubber compound**

| | |
|---|---|
| 25 | NBR |
| 02 | ECO |

**Precharge**

| | |
|---|---|
| 000 | No-precharge |
| XXX | 005 to 130bar (Step 5 by 5) |

kovaz.cz

kovaz.cz

# DA Series 140 - 350 BAR, 0.075 to 0.75 Litres

## NBR rubber mix (previous known as ELM range)

E-configurable product
visit Parker.com/acde

Standard Version (Carbon steel /mix NBR) compatible with mineral oils (2)
According to PED 2014/68/EU

*Product, Part numbers, Accessories*

| **Type**<br>Part number | **Clamps**<br>**Model** | **Lock nut**<br>Model | **Cross Reference OLAER** | **Cross Reference ADE** |
|---|---|---|---|---|
| DA-0.075L-250BAR-10849201125<br>DA-007-25000AF1125PXXX* | - | - | ELM 0.075-250/00/AF*<br>10849201125 | ADE007-25R1A2 |
| DA-0.16L-250BAR-10849301125<br>DA-016-25000AF1125PXXX* | - | - | ELM 0.16-250/00/AF*<br>10849301125 | ADE016-25R1A2 |
| DA-0.32L-210BAR-10986601125<br>DA-032-21000AF1125PXXX* | E95 (1)<br>20250803648 | - | ELM 0.32-210/00/AF*<br>10986601125 | ADE032-21R1A2 |
| DA-0.50L-210BAR-10849501125<br>DA-050-21000AF1125PXXX* | E106 (1)<br>20250903648 | - | ELM 0.5-210/00/AF*<br>10849501125 | ADE050-21R1A2 |
| DA-0.50L-210BAR-10849601125<br>DA-050-21000CF1125PXXX* | E106 (1)<br>20250903648 | M33x1.5<br>10945700100 | ELM 0.5-210/00/CF*<br>10849601125 | |
| DA-0.75L-210BAR-10849701125<br>DA-075-21000AF1125PXXX* | E114 (1)<br>20251003648 | - | ELM 0.75-210/00/AF*<br>10849701125 | ADE075-21R1A2 |
| DA-0.75L-210BAR-10849801125<br>DA-075-21000CF1125PXXX* | E114 (1)<br>20251003648 | M33x1.5<br>10945700100 | ELM 0.75-210/00/CF*<br>10849801125 | |
| DA-0.75L-350BAR-10931801125<br>DA-075-35000AF1125PXXX* | E136 (1)<br>20251103648 | - | ELM 0.75-350/00/AF*<br>10931801125 | |
| DA-0.75L-350BAR-10931901125<br>DA-075-35000CF1125PXXX* | E136 (1)<br>20251103648 | M33x1.5<br>10945700100 | ELM 0.75-350/00/CF*<br>10931901125 | |

(2) For other fluids consult Parker

* According to Article 4.3 PED 2014/68/EU

Form A/ Form B

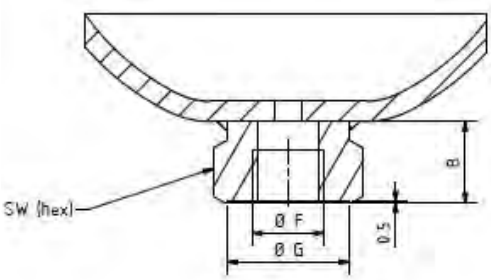


Form C/ Form D

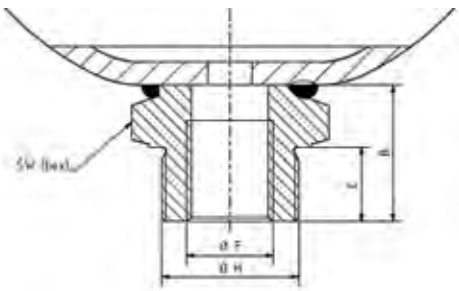


Gas Valve

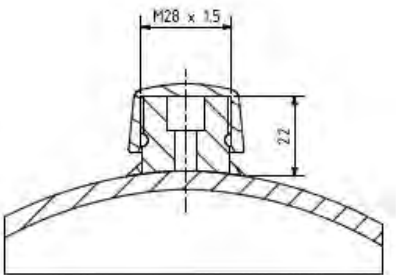

| Type | Effective Gas vol. Litres | Max. Working pressure (PS) bar | Temp. Min/ Max (°C) | Max. Pre-charge bar | Max compression in bar ratio P2/P0 | Max Pressure amplitude P2-P1 | Weight kg | Dimensions in mm | | | | | | Oilport | |
|---|---|---|---|---|---|---|---|---|---|---|---|---|---|---|---|
| | | | | | | | | A max Height | B | C | SW | D | G | F | H |
| DA-0.075L-250BAR-10849201125 | 0.075 | 250 | -10/+80 | 130 | 8 | 210 | 0.7 | 112 | 20 | | 32 | 64 | 29 | G½ | - |
| DA-0.16L-250BAR-10849301125 | 0.16 | 250 | -10/+80 | 130 | 6 | 210 | 1 | 120 | 20 | | 32 | 75 | 29 | G½ | - |
| DA-0.32L-210BAR-10986601125 | 0.32 | 210 | -10/+80 | 130 | 8 | 140 | 1.4 | 135 | 20 | | 32 | 92 | 29 | G½ | - |
| DA-0.50L-210BAR-10849501125 | 0.5 | 210 | -20/+80 | 130 | 8 | 175 | 2 | 153 | 22 | | 41 | 107 | 34 | G½ | - |
| DA-0.50L-210BAR-10849601125 | 0.5 | 210 | -20/+80 | 130 | 8 | 175 | 2 | 164 | 33 | 18 | 41 | 107 | - | G½ | M33x1.5 |
| DA-0.75L-210BAR-10849701125 | 0.75 | 210 | -20/+80 | 130 | 8 | 175 | 2.6 | 167 | 22 | | 41 | 122 | 34 | G½ | - |
| DA-0.75L-210BAR-10849801125 | 0.75 | 210 | -20/+80 | 130 | 8 | 175 | 2.6 | 178 | 33 | 18 | 41 | 122 | - | G½ | M33x1.5 |
| DA-0.75L-350BAR-10931801125 | 0.75 | 350 | -20/+80 | 130 | 8 | 150 | 4 | 174 | 22 | | 41 | 128 | 34 | G½ | - |
| DA-0.75L-350BAR-10931901125 | 0.75 | 350 | -20/+80 | 130 | 8 | 150 | 4 | 185 | 33 | 18 | 41 | 128 | - | G½ | M33x1.5 |

Lock-nut

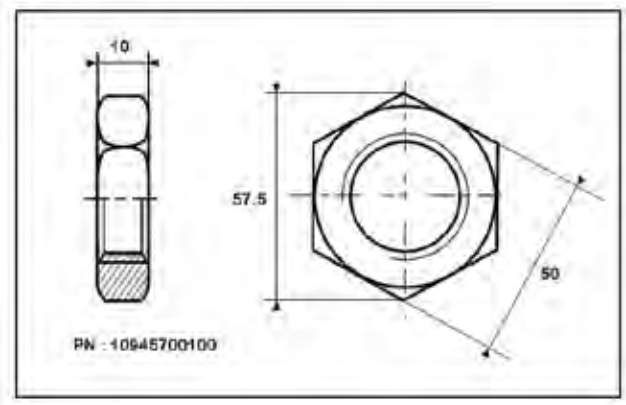


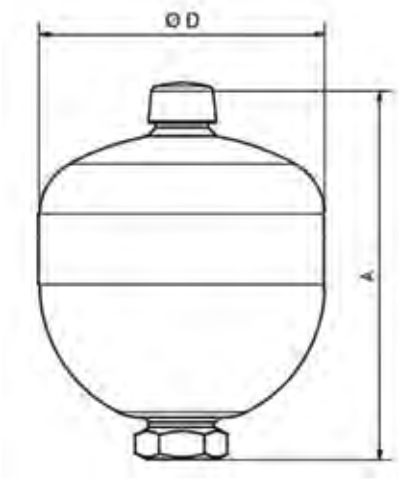

# DA Series 140 - 350 BAR, 1 to 1.4 Litres

## NBR rubber mix (previous known as ELM range)

Standard Version (Carbon steel /mix NBR) compatible with mineral oils (2)
According to PED 2014/68/EU

**E-configurable product**
**visit Parker.com/acde**

| Type<br>Part number | Clamps<br>Model (quantity)<br>Part number | Lock nut<br>Model (quantity)<br>Part number | Cross Reference OLAER | Cross Reference ADE |
|---|---|---|---|---|
| DA-1.00L-210BAR-10984701125<br>DA-100-21000AF1125PXXX* | E136 (1)<br>20251103648 | - | ELM 1-210/00/AF*<br>10984701125 | ADE100-21R1A2 |
| DA-1.00L-210BAR-10984801125<br>DA-100-21000CF1125PXXX* | E136 (1)<br>20251103648 | M33x1.5<br>10945700100 | ELM 1-210/00/CF*<br>10984801125 | |
| DA-1.00L-350BAR-11110901125<br>DA-100-35000AF1125PXXX* | E136 (1)<br>20251103648 | - | ELM 1-350/00/AF*<br>11110901125 | |
| DA-1.00L-350BAR-11111001125<br>DA-100-35000CF1125PXXX* | E136 (1)<br>20251103648 | M33x1.5<br>10945700100 | ELM 1-350/00/CF*<br>1111101125 | |
| DA-1.40L-140BAR-10850201125<br>DA-140-14090AF1125PXXX | E155 (1)<br>20251203648 | - | ELM 1.4-140/90/AF<br>10850201125 | ADE140-14R1C2 |
| DA-1.40L-140BAR-10850301125<br>DA-140-14090CF1125PXXX | E155 (1)<br>20251203648 | M33x1.5<br>10945700100 | ELM 1.4-140/90/CF<br>10850301125 | |
| DA-1.40L-210BAR-10996501125<br>DA-140-21090AF1125PXXX | E155 (1)<br>20251203648 | - | ELM 1.4-210/90/AF<br>10996501125 | |
| DA-1.40L-210BAR-10996601125<br>DA-140-21090CF1125PXXX | E155 (1)<br>20251203648 | M33x1.5<br>10945700100 | ELM 1.4-210/90/CF<br>10996601125 | |
| DA-1.40L-250BAR-11013201125<br>DA-140-25090AF1125PXXX | E155 (1)<br>20251203648 | - | ELM 1.4-250/90/AF<br>11013201125 | ADE140-25R1C2 |
| DA-1.40L-250BAR-11013301125<br>DA-140-25090CF1125PXXX | E155 (1)<br>20251203648 | M33x1.5<br>10945700100 | ELM 1.4-250/90/CF<br>11013301125 | |
| DA-1.40L-350BAR-10932101125<br>DA-140-35090AF1125PXXX | E160 (1)<br>20259003648 | - | ELM 1.4-350/90/AF<br>10932101125 | |
| DA-1.40L-350BAR-10932201125<br>DA-140-35090CF1125PXXX | E160 (1)<br>20259003648 | M33x1.5<br>10945700100 | ELM 1.4-350/90/CF<br>10932201125 | |

(2) For other fluids consult Parker
* According to Article 4.3 PED 2014/68/EU

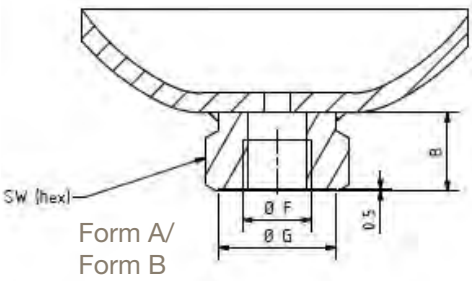

Form A/
Form B

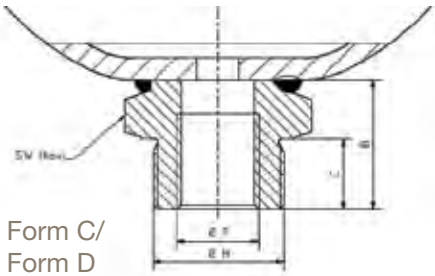

Form C/
Form D

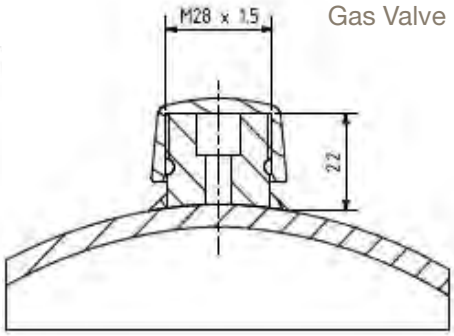

Gas Valve

| Type | Effective Gas vol. Litres | Max. Working pressure (PS) bar | Temp. Min/ Max (°C) | Max. Pre-charge bar | Max com-pression in bar ratio P2/ P0 | Max Pressure amplitude P2-P1 | Weight kg | Dimensions in mm | | | | | | Oilport | |
|---|---|---|---|---|---|---|---|---|---|---|---|---|---|---|---|
| | | | | | | | | A max Height | B | C | SW | D | G | F | H |
| DA-1.00L-210BAR-10984701125 | 1 | 210 | -20/+80 | 130 | 8 | 170 | 3.5 | 182 | 22 | | 41 | 136 | 34 | G½ | - |
| DA-1.00L-210BAR-10984801125 | 1 | 210 | -20/+80 | 130 | 8 | 170 | 3.5 | 192 | 33 | 18 | 41 | 136 | - | G½ | M33x1.5 |
| DA-1.00L-350BAR-11110901125 | 1 | 350 | -10/+80 | 130 | 8 | 150 | 5 | 200 | 22 | | 41 | 129 | 34 | G½ | - |
| DA-1.00L-350BAR-11111001125 | 1 | 350 | -10/+80 | 130 | 8 | 150 | 5 | 211 | 33 | 18 | 41 | 129 | | G½ | M33x2 |
| DA-1.40L-140BAR-10850201125 | 1.4 | 140 | -20/+80 | 130 | 8 | 120 | 4.2 | 192 | 22 | | 41 | 147 | 34 | G½ | - |
| DA-1.40L-140BAR-10850301125 | 1.4 | 140 | -20/+80 | 130 | 8 | 120 | 4.2 | 203 | 33 | 18 | 41 | 147 | - | G½ | M33x1.5 |
| DA-1.40L-210BAR-10996501125 | 1.4 | 210 | -20/+80 | 130 | 8 | 120 | 4.2 | 192 | 22 | | 41 | 148 | 34 | G½ | - |
| DA-1.40L-210BAR-10996601125 | 1.4 | 210 | -20/+80 | 130 | 8 | 120 | 4.2 | 203 | 33 | 18 | 41 | 148 | - | G½ | M33x1.5 |
| DA-1.40L-250BAR-11013201125 | 1.4 | 250 | -20/+80 | 130 | 8 | 140 | 5.4 | 196 | 22 | | 41 | 152 | 34 | G½ | |
| DA-1.40L-250BAR-11013301125 | 1.4 | 250 | -20/+80 | 130 | 8 | 140 | 6 | 207 | 33 | 18 | 41 | 152 | - | G½ | M33x1.5 |
| DA-1.40L-350BAR-10932101125 | 1.4 | 350 | -20/+80 | 130 | 8 | 150 | 7 | 199 | 22 | | 41 | 156 | 34 | G½ | |
| DA-1.40L-350BAR-10932201125 | 1.4 | 350 | -20/+80 | 130 | 8 | 150 | 7 | 221 | 44 | 18 | 44 | 156 | - | G½ | M33x1.5 |

Lock-nut

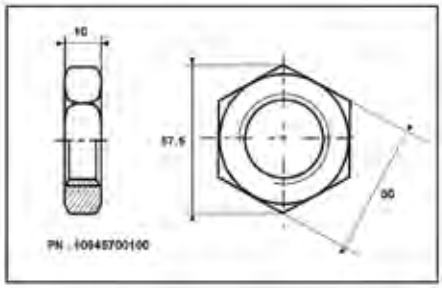


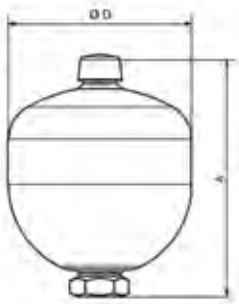

# DA Series 140 - 350 BAR, 2 to 3.5 Litres

### NBR rubber mix (previous known as ELM range)

Standard Version (Carbon steel /mix NBR) compatible with mineral oils (2)
According to PED 2014/68/EU
*Product, Part numbers, Accessories*

**E-configurable product**
**visit Parker.com/acde**

| Type<br>Part number | Clamps<br>Model (quantity)<br>Part number | Lock nut<br>Model (quantity)<br>Part number | Cross Reference OLAER | Cross Reference ADE |
|---|---|---|---|---|
| DA-2.00L-100BAR-10850401125<br>DA-200-10090AF1125PXXX | E155 (1)<br>20251203648 | - | ELM 2-100/90/AF<br>10850401125 | |
| DA-2.00L-250BAR-11013401125<br>DA-200-25090BF1125PXXX | E155 (1)<br>20251203648 | - | ELM 2-250/90/AF<br>11013401125 | |
| DA-2.00L-350BAR-11006001125<br>DA-200-35090BF1125PXXX | E160 (1)<br>20259003648 | - | ELM 2-350/90/AF<br>11006001125 | |
| DA-2.00L-350BAR-11006101125<br>DA-200-35090DF1125PXXX | E160 (1)<br>20259003648 | M45X1.5 | ELM 2-350/90/CF<br>11006101125 | |
| DA-2.80L-250BAR-10887901125<br>DA-280-25090BF1125PXXX | E168 (1)<br>20251303648 | - | ELM 2.8-250/90/AF<br>10887901125 | ADE280-25R1C2 |
| DA-2.80L-350BAR-10975801125<br>DA-280-35090BF1125PXXX | E180 (1)<br>20243203625 | - | ELM 2.8-350/90/AF<br>10975801125 | |
| DA-2.80L-350BAR-10975901125<br>DA-280-35090DF1125PXXX | E180 (1)<br>20243203625 | M45X1.5 | ELM 2.8-350/90/CF<br>10975901125 | |
| DA-3.50L-250BAR-10850501125<br>DA-350-25090BF1125PXXX | E168 (1)<br>20251303648 | - | ELM 3.5-250/90/AF<br>10850501125 | ADE350-25R1C2 |
| MBSP 3,5-350<br>350-1315-032-711 | E180 (1)<br>20243203625 | - | ELM 3.5-350/90/AF<br>10984901125 | |
| MBSP 3,5-350<br>350-1315-022-711 | E180 (1)<br>20243203625 | M45X1.5 | ELM 3.5-350/90/CF<br>10985001125 | |

(2) For other fluids consult Parker

Form A/ Form B

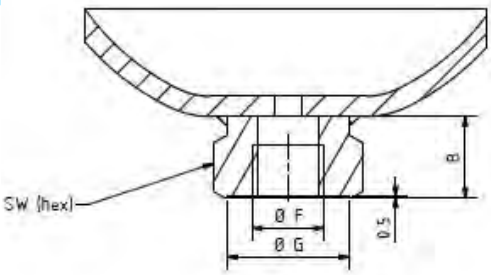


Form C/ Form D

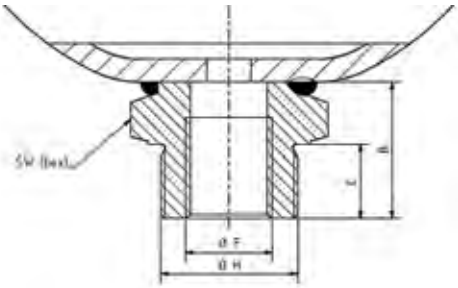


Gas Valve

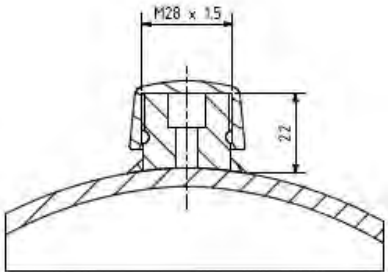

| Type Part number | Effective Gas vol. Litres | Max. Working pressure (PS) bar | Temp. Min/ Max (°C) | Max. Pre-charge bar | Max compres-sion in bar ratio P2/P0 | Max Pressure amplitude P2-P1 | Weight kg | Dimensions in mm | | | | | | Oilport | |
|---|---|---|---|---|---|---|---|---|---|---|---|---|---|---|---|
| | | | | | | | | A max Height | B | C | SW | D | G | F | H |
| DA-2.00L-100BAR-10850401125 | 2 | 100 | -10/+80 | 100 | 8 | 80 | 3.5 | 241 | 22 | | 41 | 145 | 34 | G½ | |
| DA-2.00L-250BAR-11013401125 | 2 | 250 | -10/+80 | 130 | 8 | 150 | 9.5 | 252 | 22 | | 41 | 156 | 33 | G3/4 | |
| DA-2.00L-350BAR-11006001125 | 2 | 350 | -10/+80 | 130 | 8 | 150 | 9.5 | 252 | 22 | | 41 | 156 | 33 | G3/4 | |
| DA-2.00L-350BAR-11006101125 | 2 | 350 | -10/+80 | 130 | 8 | 150 | 9.5 | 270 | 40 | 20 | 50 | 156 | - | G3/4 | M45x1.5 |
| DA-2.80L-250BAR-10887901125 | 2.8 | 250 | -10/+80 | 130 | 6 | 140 | 8.5 | 269 | 20 | | 41 | 168 | 33 | G3/4 | |
| DA-2.80L-350BAR-10975801125 | 2.8 | 350 | -10/+80 | 130 | 6 | 200 | 14.3 | 265 | 23 | | 55 | 180 | 34 | G3/4 | |
| DA-2.80L-350BAR-10975901125 | 2.8 | 350 | -10/+80 | 130 | 6 | 200 | 14.5 | 286 | 21 | 20 | 55 | 180 | - | G3/4 | M45x1.5 |
| DA-3.50L-250BAR-10850501125 | 3.5 | 250 | -10/+80 | 130 | 4 | 100 | 10.2 | 314 | 20 | | 41 | 168 | 33 | G3/4 | |
| MBSP 3,5-350 | 3.5 | 350 | -10/+80 | 130 | 4 | 200 | 16 | 305 | 23 | | 55 | 180 | 34 | G3/4 | |
| MBSP 3,5-350 | 3.5 | 350 | -10/+80 | 130 | 4 | 200 | 16.5 | 326 | 26 | 20 | 55 | 180 | - | G3/4 | M45x1.5 |

Lock-nut

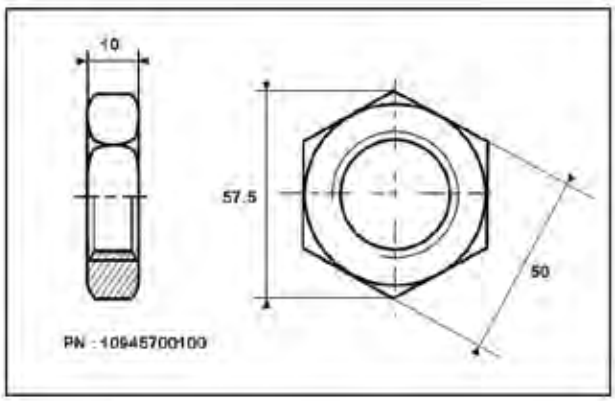


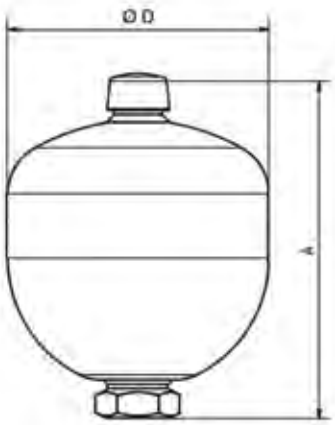


Above

# DA Series 140 - 350 BAR, 0.075 to 0.75 Litres

### ECO rubber mix (previous known as ELM range)

Standard Version (Carbon steel /mix **ECO**) compatible with mineral oils (2)
According to PED 2014/68/EU.

**E-configurable product**
**visit Parker.com/acde**

*Product, Part numbers, Accessories*

| **Type**<br>Part number | **Clamps**<br>**Model (quantity)**<br>**Part number** | **Lock nut**<br>**Model (quantity)**<br>Part number | **Cross Reference OLAER** | **Cross Reference ADE** |
|---|---|---|---|---|
| DA-0.075L-250BAR-10849201102<br>DA-007-25000AF1102PXXX* | - | - | ELM 0.075-250/00/AF*<br>10849201102 | ADE007-25R9A2 |
| DA-0.16L-250BAR-10849301102<br>DA-016-25000AF1102PXXX* | - | - | ELM 0.16-250/00/AF*<br>10849301102 | ADE016-25R9A2 |
| DA-0.32L-210BAR-10986601102<br>DA-032-21000AF1102PXXX* | E95 (1)<br>20250803648 | - | ELM 0.32-210/00/AF*<br>10986601102 | ADE032-21R9A2 |
| DA-0.50L-210BAR-10849501102<br>DA-050-21000AF1102PXXX* | E106 (1)<br>20250903648 | - | ELM 0.5-210/00/AF*<br>10849501102 | ADE050-21R9A2 |
| DA-0.50L-210BAR-10849601102<br>DA-050-21000CF1102PXXX* | E106 (1)<br>20250903648 | M33x1.5<br>10945700100 | ELM 0.5-210/00/CF*<br>10849601102 | |
| DA-0.75L-210BAR-10849701102<br>DA-075-21000AF1102PXXX* | E114 (1)<br>20251003648 | - | ELM 0.75-210/00/AF*<br>10849701102 | ADE075-21R9A2 |
| DA-0.75L-210BAR-10849801102<br>DA-075-21000CF1102PXXX* | E114 (1)<br>20251003648 | M33x1.5<br>10945700100 | ELM 0.75-210/00/CF*<br>10849801102 | |
| DA-0.75L-350BAR-10931801102<br>DA-075-35000AF1102PXXX* | E136 (1)<br>20251103648 | - | ELM 0.75-350/00/AF*<br>10931801102 | |
| DA-0.75L-350BAR-10931901102<br>DA-075-35000CF1102PXXX* | E136 (1)<br>20251103648 | M33x1.5<br>10945700100 | ELM 0.75-350/00/CF*<br>10931901102 | |

(2) For other fluids consult Parker

* According to Article 4.3 PED 2014/68/EU

Form A/ Form B

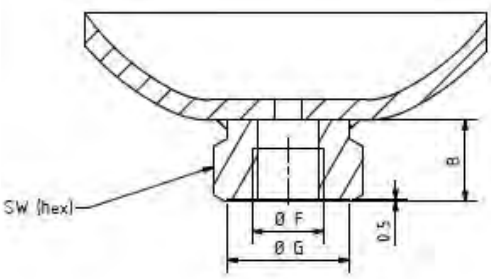


Form C/ Form D

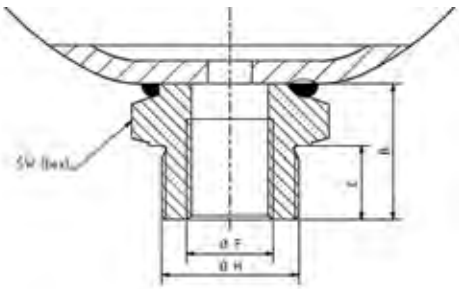


Gas Valve

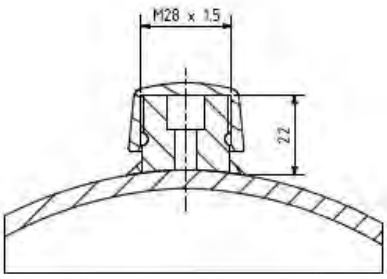

| Type<br>Part number | Effective Gas vol.<br>Litres | Max. Working pressure (PS)<br>bar | Temp. Min/ Max<br>(°C) | Max. Pre-charge<br>bar | Max compres-sion in bar ratio P2/P0 | Max Pressure amplitude P2-P1 | Weight<br>kg | Dimensions in mm | | | | | | Oilport | |
|---|---|---|---|---|---|---|---|---|---|---|---|---|---|---|---|
| | | | | | | | | A max Height | B | C | SW | D | G | F | H |
| DA-0.075L-250BAR-10849201102 | 0.075 | 250 | -35/+80 | 130 | 8 | 210 | 0.7 | 112 | 20 | | 32 | 64 | 29 | G½ | - |
| DA-0.16L-250BAR-10849301102 | 0.16 | 250 | -35/+80 | 130 | 6 | 210 | 1 | 120 | 20 | | 32 | 75 | 29 | G½ | - |
| DA-0.32L-210BAR-10986601102 | 0.32 | 210 | -35/+80 | 130 | 8 | 140 | 1.4 | 135 | 20 | | 32 | 92 | 29 | G½ | - |
| DA-0.50L-210BAR-10849501102 | 0.5 | 210 | -35/+80 | 130 | 8 | 175 | 2 | 153 | 22 | | 41 | 107 | 34 | G½ | - |
| DA-0.50L-210BAR-10849601102 | 0.5 | 210 | -35/+80 | 130 | 8 | 175 | 2 | 164 | 33 | 18 | 41 | 107 | - | G½ | M33x1.5 |
| DA-0.75L-210BAR-10849701102 | 0.75 | 210 | -35/+80 | 130 | 8 | 175 | 2.6 | 167 | 22 | | 41 | 122 | 34 | G½ | - |
| DA-0.75L-210BAR-10849801102 | 0.75 | 210 | -35/+80 | 130 | 8 | 175 | 2.6 | 178 | 33 | 18 | 41 | 122 | - | G½ | M33x1.5 |
| DA-0.75L-350BAR-10931801102 | 0.75 | 350 | -35/+80 | 130 | 8 | 150 | 4 | 174 | 22 | | 41 | 128 | 34 | G½ | - |
| DA-0.75L-350BAR-10931901102 | 0.75 | 350 | -35/+80 | 130 | 8 | 150 | 4 | 185 | 33 | 18 | 41 | 128 | - | G½ | M33x1.5 |

Lock-nut

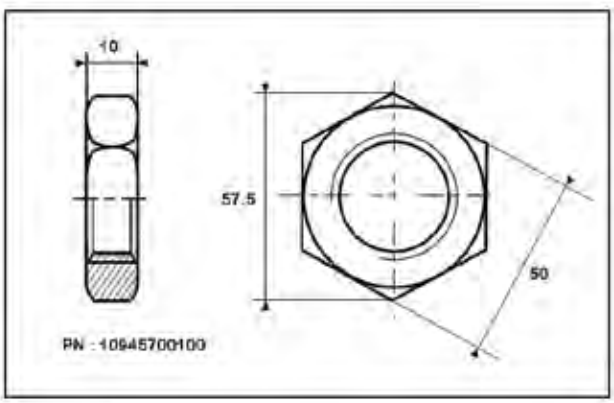


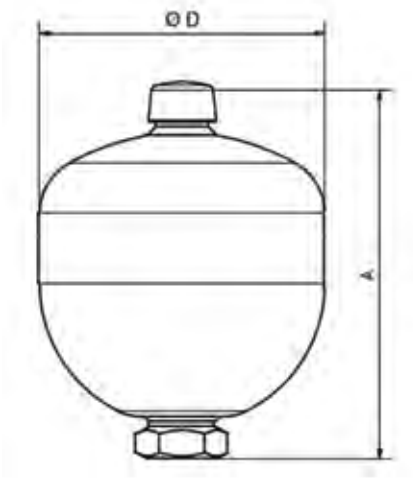

# DA Series 140 - 350 BAR, 1 to 1.4 Litres

### ECO rubber mix (previous known as ELM range)

Standard Version (Carbon steel /mix **ECO**) compatible with mineral oils (2)
According to PED 2014/68/EU.

**E-configurable product**
**visit Parker.com/acde**

*Product, Part numbers, Accessories*

| **Type**<br>Part number | **Clamps**<br>**Model (quantity)**<br>**Part number** | Lock nut<br>Model (quantity)<br>Part number | **Cross Reference OLAER** | **Cross Reference ADE** |
|---|---|---|---|---|
| DA-1.00L-210BAR-10984701102<br>DA-100-21000AF1102PXXX* | E136 (1)<br>20251103648 | - | ELM 1-210/00/AF*<br>10984701102 | ADE100-21R9A2 |
| DA-1.00L-210BAR-10984801102<br>DA-100-21000CF1102PXXX* | E136 (1)<br>20251103648 | M33x1.5<br>10945700100 | ELM 1-210/00/CF*<br>10984801102 | |
| DA-1.00L-350BAR-11110901102<br>DA-100-35000AF1102PXXX* | E136 (1)<br>20251103648 | - | ELM 1-350/00/AF*<br>11110901102 | |
| DA-1.00L-350BAR-11111001102<br>DA-100-35000CF1102PXXX* | E136 (1)<br>20251103648 | M33x1.5<br>10945700100 | ELM 1-350/00/CF*<br>1111101102 | |
| DA-1.40L-140BAR-10850201102<br>DA-140-14090AF1102PXXX | E155 (1)<br>20251203648 | - | ELM 1.4-140/90/AF<br>10850201102 | ADE140-14R9C2 |
| DA-1.40L-140BAR-10850301102<br>DA-140-14090CF1102PXXX | E155 (1)<br>20251203648 | M33x1.5<br>10945700100 | ELM 1.4-140/90/CF<br>10850301102 | |
| DA-1.40L-210BAR-10996501102<br>DA-140-21090AF1102PXXX | E155 (1)<br>20251203648 | - | ELM 1.4-210/90/AF<br>10996501102 | |
| DA-1.40L-210BAR-10996601102<br>DA-140-21090CF1102PXXX | E155 (1)<br>20251203648 | M33x1.5<br>10945700100 | ELM 1.4-210/90/CF<br>10996601102 | |
| DA-1.40L-250BAR-11013201102<br>DA-140-25090AF1102PXXX | E155 (1)<br>20251203648 | - | ELM 1.4-250/90/AF<br>11013201102 | ADE140-25R9C2 |
| DA-1.40L-250BAR-11013301102<br>DA-140-25090CF1102PXXX | E155 (1)<br>20251203648 | M33x1.5<br>10945700100 | ELM 1.4-250/90/CF<br>11013301102 | |
| DA-1.40L-350BAR-10932101102<br>DA-140-35090AF1102PXXX | E160 (1)<br>20259003648 | - | ELM 1.4-350/90/AF<br>10932101102 | |
| DA-1.40L-350BAR-10932201102<br>DA-140-35090CF1102PXXX | E160 (1)<br>20259003648 | M33x1.5<br>10945700100 | ELM 1.4-350/90/CF<br>10932201102 | |

(2) For other fluids consult Parker

* According to Article 4.3 PED 2014/68/EU

Form A/ Form B

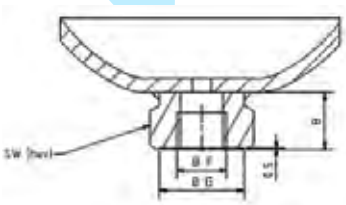

Form C/ Form D

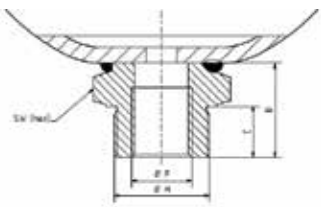

Gas Valve

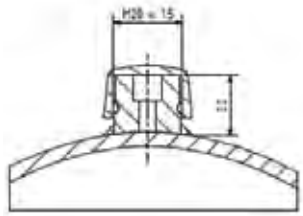

| Type<br>Part number | Effective Gas vol.<br>Litres | Max. Working pressure (PS)<br>bar | Temp. Min/ Max<br>(°C) | Max. Pre-charge<br>bar | Max com-pression in bar ratio P2/P0 | Max Pressure amplitude P2-P1 | Weight<br>kg | Dimensions in mm | | | | | | Oilport | |
|---|---|---|---|---|---|---|---|---|---|---|---|---|---|---|---|
| | | | | | | | | A max Height | B | C | SW | D | G | F | H |
| DA-1.00L-210BAR-10984701102 | 1 | 210 | -35/+80 | 130 | 8 | 170 | 4 | 182 | 22 | | 41 | 136 | 34 | G½ | - |
| DA-1.00L-210BAR-10984801102 | 1 | 210 | -35/+80 | 130 | 8 | 170 | 4 | 192 | 33 | 18 | 41 | 136 | - | G½ | M33x1.5 |
| DA-1.00L-350BAR-11110901102 | 1 | 350 | -35/+80 | 130 | 8 | 150 | 5 | 200 | 22 | | 41 | 129 | 34 | G½ | - |
| DA-1.00L-350BAR-11111001102 | 1 | 350 | -35/+80 | 130 | 8 | 150 | 5 | 211 | 33 | 18 | 41 | 129 | | G½ | M33x2 |
| DA-1.40L-140BAR-10850201102 | 1 | 140 | -35/+80 | 130 | 8 | 120 | 4 | 192 | 22 | | 41 | 147 | 34 | G½ | - |
| DA-1.40L-140BAR-10850301102 | 1 | 140 | -35/+80 | 130 | 8 | 120 | 4 | 203 | 33 | 18 | 41 | 147 | - | G½ | M33x1.5 |
| DA-1.40L-210BAR-10996501102 | 1 | 210 | -35/+80 | 130 | 8 | 120 | 4 | 192 | 22 | | 41 | 148 | 34 | G½ | - |
| DA-1.40L-210BAR-10996601102 | 1 | 210 | -35/+80 | 130 | 8 | 120 | 4 | 203 | 33 | 18 | 41 | 148 | - | G½ | M33x1.5 |
| DA-1.40L-250BAR-11013201102 | 1 | 250 | -35/+80 | 130 | 8 | 140 | 5 | 196 | 22 | | 41 | 152 | 34 | G½ | |
| DA-1.40L-250BAR-11013301102 | 1 | 250 | -35/+80 | 130 | 8 | 140 | 6 | 207 | 33 | 18 | 41 | 152 | - | G½ | M33x1.5 |
| DA-1.40L-350BAR-10932101102 | 1 | 350 | -35/+80 | 130 | 8 | 150 | 7 | 199 | 22 | | 41 | 156 | 34 | G½ | |
| DA-1.40L-350BAR-10932201102 | 1 | 350 | -35/+80 | 130 | 8 | 150 | 7 | 221 | 44 | 18 | 44 | 156 | - | G½ | M33x1.5 |

Lock-nut

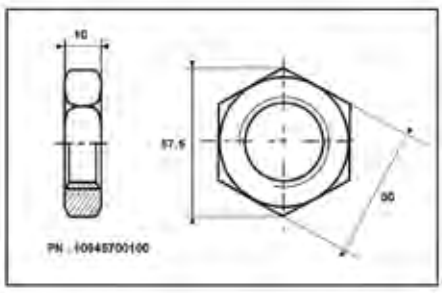

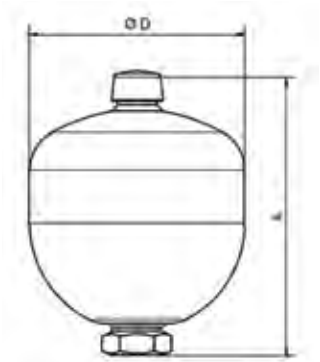

# DA Series 140 - 350 BAR, 2 to 3.5 Litres

### ECO rubber mix (previous known as ELM range)

Standard Version (Carbon steel /mix **ECO**) compatible with mineral oils (2)
According to PED 2014/68/EU.

**E-configurable product**
**visit Parker.com/acde**

*Product, Part numbers, Accessories*

| **Type**<br>Part number | **Clamps**<br>**Model (quantity)**<br>**Part number** | Lock nut<br>Model (quantity)<br>Part number | **Cross Reference OLAER** | **Cross Reference ADE** |
|---|---|---|---|---|
| DA-2.00L-100BAR-10850401102<br>DA-200-10090AF1102PXXX | E155 (1)<br>20251203648 | - | ELM 2-100/90/AF<br>10850401102 | |
| DA-2.00L-250BAR-11013401102<br>DA-200-25090BF1102PXXX | E155 (1)<br>20251203648 | - | ELM 2-250/90/AF<br>11013401102 | |
| DA-2.00L-350BAR-11006001102<br>DA-200-35090BF1102PXXX | E160 (1)<br>20259003648 | - | ELM 2-350/90/AF<br>11006001102 | |
| DA-2.00L-350BAR-11006101102<br>DA-200-35090DF1102PXXX | E160 (1)<br>20259003648 | M45X1.5 | ELM 2-350/90/CF<br>11006101102 | |
| DA-2.80L-250BAR-10887901102<br>DA-280-25090BF1102PXXX | E168 (1)<br>20251303648 | - | ELM 2.8-250/90/AF<br>10887901102 | ADE280-25R9C2 |
| DA-2.80L-350BAR-10975801102<br>DA-280-35090BF1102PXXX | E180 (1)<br>20243203625 | - | ELM 2.8-350/90/AF<br>10975801102 | |
| DA-2.80L-350BAR-10975901102<br>DA-280-35090DF1102PXXX | E180 (1)<br>20243203625 | M45X1.5 | ELM 2.8-350/90/CF<br>10975901102 | |
| DA-3.50L-250BAR-10850501102<br>DA-350-25090BF1102PXXX | E168 (1)<br>20251303648 | - | ELM 3.5-250/90/AF<br>10850501102 | ADE350-25R9C2 |
| MBSP 3,5-350<br>350-1315-032-741 | E180 (1)<br>20243203625 | - | ELM 3.5-350/90/AF<br>10984901102 | |
| MBSP 3,5-350<br>350-1315-022-741 | E180 (1)<br>20243203625 | M45X1.5 | ELM 3.5-350/90/CF<br>10985001102 | |

(2) For other fluids consult Parker

* According to Article 4.3 PED 2014/68/EU

Form A/ Form B

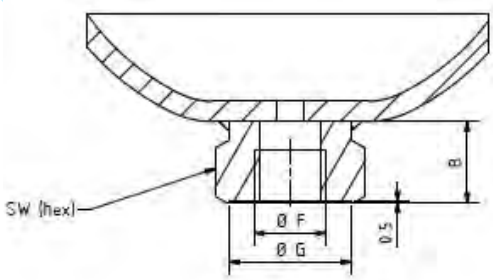


Form C/ Form D

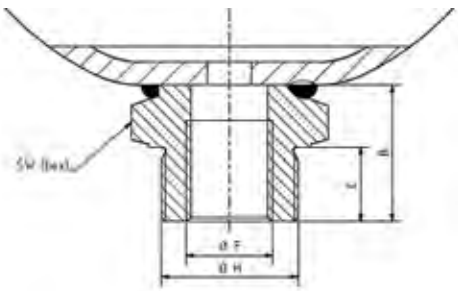


Gas Valve

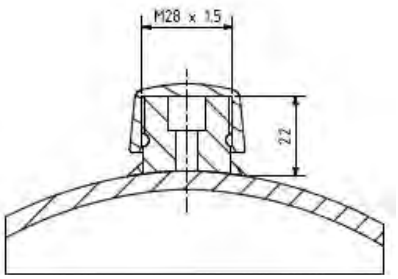

| **Type** Part number | **Effective Gas vol.** Litres | **Max. Working pressure (PS)** bar | **Temp. Min/ Max** (°C) | **Max. Pre-charge** bar | **Max compres-sion in bar ratio P2/P0** | **Max Pressure amplitude P2-P1** | **Weight** kg | **Dimensions in mm** | | | | | | **Oilport** | |
|---|---|---|---|---|---|---|---|---|---|---|---|---|---|---|---|
| | | | | | | | | **A max Height** | **B** | **C** | **SW** | **D** | **G** | **F** | **H** |
| DA-2.00L-100BAR-10850401102 | 2.0 | 100 | -35/+80 | 100 | 8 | 80 | 3.50 | 241 | 22 | | 41 | 145 | 34 | G½ | |
| DA-2.00L-250BAR-11013401102 | 2.0 | 250 | -35/+80 | 130 | 8 | 150 | 9.50 | 252 | 22 | | 41 | 156 | 33 | G3/4 | |
| DA-2.00L-350BAR-11006001102 | 2.0 | 350 | -35/+80 | 130 | 8 | 150 | 9.50 | 252 | 22 | | 41 | 156 | 33 | G3/4 | |
| DA-2.00L-350BAR-11006101102 | 2.0 | 350 | -35/+80 | 130 | 8 | 150 | 9.50 | 270 | 40 | 20 | 50 | 156 | - | G3/4 | M45x1.5 |
| DA-2.80L-250BAR-10887901102 | 2.8 | 250 | -35/+80 | 130 | 6 | 140 | 8.50 | 269 | 20 | | 41 | 168 | 33 | G3/4 | |
| DA-2.80L-350BAR-10975801102 | 2.8 | 350 | -35/+80 | 130 | 6 | 200 | 14.30 | 265 | 23 | | 55 | 180 | 34 | G3/4 | |
| DA-2.80L-350BAR-10975901102 | 2.8 | 350 | -35/+80 | 130 | 6 | 200 | 14.50 | 286 | 21 | 20 | 55 | 180 | - | G3/4 | M45x1.5 |
| DA-3.50L-250BAR-10850501102 | 3.5 | 250 | -35/+80 | 130 | 4 | 100 | 10.20 | 314 | 20 | | 41 | 168 | 33 | G3/4 | |
| MBSP 3,5-350 | 3.5 | 350 | -35/+80 | 130 | 4 | 200 | 16.00 | 305 | 23 | | 55 | 180 | 34 | G3/4 | |
| MBSP 3,5-350 | 3.5 | 350 | -35/+80 | 130 | 4 | 200 | 16.50 | 326 | 26 | 20 | 55 | 180 | - | G3/4 | M45x1.5 |

Lock-nut

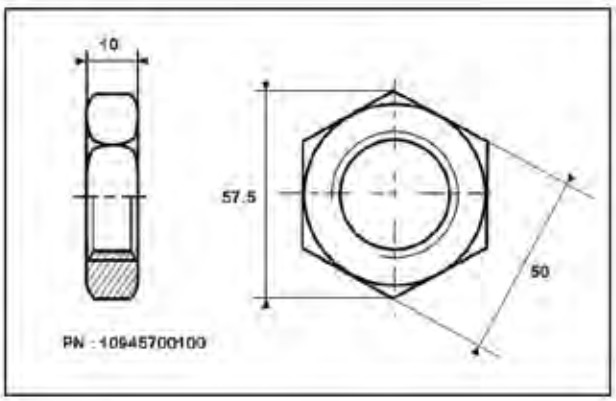


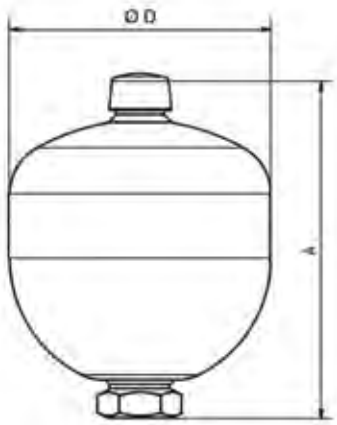


Above