Flowmeters & Monitors

A range of cost saving solutions

Protect systems, reduce fluid and air loss and increase efficiency

Effective and accurate flow measurement

An extensive range of flow metering products. LoFlow oil and water flowmeters. 10 bar max. working pressure. Easiflow meters and flowswitches with flows from 1 to 150 l/min. Dataflow 4-20mA and pulse output flow transmitters and the Dataflow Compact inline flow transmitter. Flowline oil, water and air calibrated flowmeters and flowswitches available in brass or Stainless Steel. Hydraulic Test Units for the speedy diagnosis of hydraulic circuit faults with flow ranges from 2 to 360 l/min.

Contact Information:

Parker Hannifin
Hydraulic Filter Division Europe

European Product Information Centre
Freephone: 00800 27 27 5374
(from AT, BE, CH, CZ, DE, EE, ES, FI, FR, IE, IT, PT, SE, SK, UK)
filtrationinfo@parker.com

www.parker.com/hfde

Product Features:

- LoFlow oil and water flowmeters. 10 bar max. working pressure.
- Easiflow meters and Flowswitches. Work in any plane. Flows from 1 to 150 l/min.
- Dataflow 4-20mA and pulse output flow transmitters and Dataflow Compact inline flow transmitter.
- Flowline oil, water and air calibrated flowmeters and flowswitches available in brass or Stainless Steel.
- Hydraulic Test Units for the speedy diagnosis of hydraulic circuit faults with flow ranges from 2 to 360 l/min.

LoFlow - Oil and Water Flowmeters

Flowmeters

Features & Benefits

- Easy to read, permanent printed scales.
- Large scale definition for precise measurement.
- Easy panel mounting assembly.
- Negligible pressure drop characteristics.
- 10 bar pressure rating.
- Simple to use.

Specification

Construction:

Body	Grillon TR55.
Back body half	ABS 7020.
Ball retainer	ABS 7020.
Back panel	PVC.
Float	See below.

Maximum working pressure:
10 bar.

Maximum working temperature:
60°C.

Accuracy:
±2% typical.

Repeatability:
±1%.

Connections:
1/4" and 3/4" tapered threads.

Note: Always install vertically.

Installation Details

Simple to fit, easy to use

The LoFlow meter has been designed for those industries where the need exists for a low cost solution to small measurements of flow with an accurate reading. LoFlow uses the well tried and tested principle of variable area flow measurement utilising the movement of a ball or float inside a calibrated tapered bore.

Typical Applications

Pharmaceutical industry
Filtration systems
Hospital equipment
For water applications
Water treatment
Photography and X-ray Equipment
Swimming pools

Installation Details

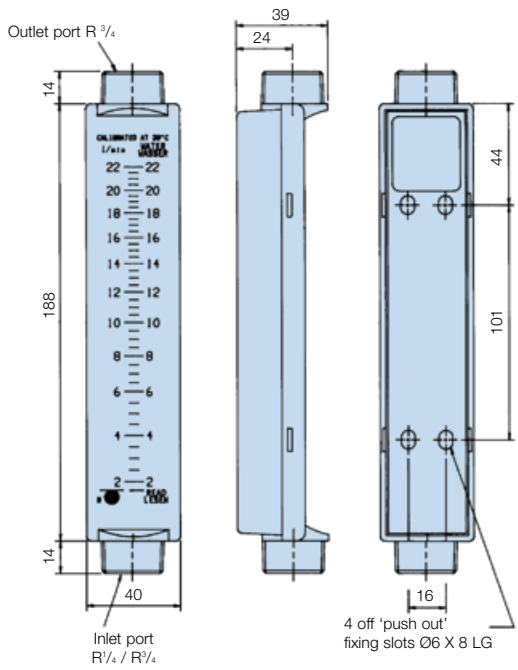

Ordering Information

Standard products table

Product number	Supersedes	Media	Ports (BSPT male)	Flow range (l/min)	Float material
LF802412	LF.2020	Water	3/4 - 3/4	0.2 - 2.0	Acetal
LF802413	LF.2100	Water	3/4 - 3/4	2.0 - 10.0	S/Steel
LF802414	LF.2220	Water	3/4 - 3/4	3.0 - 22.0	S/Steel
LF801431	LF.1002	Oil	1/4 - 3/4	0.010 - 0.20	S/Steel
LF802432	LF.1009	Oil	3/4 - 3/4	0.1 - 0.9	Acetal
LF802434	LF.1090	Oil	3/4 - 3/4	1.0 - 9.0	S/Steel
LF801411	LF.2005	Water	1/4 - 3/4	0.06 - 0.55	S/Steel

Note 1: Part numbers featured with bold highlighted codes will ensure a 'standard' product selection.
Note 2: Alternate displayed part number selection will require you to contact Parker Filtration for availability.

Easiflow - Meters and Flowswitches

Flowmeters

Features & Benefits

- Oil and water calibrated.
- Works in any plane.
- Pressures up to 10 bar.
- Flows from 1 to 150 l/min.
- Accuracy ±5% FSD.
- Repeatability ±1% FSD.
- Switches – fully adjustable flow rate signalling.
- Plant and equipment protection.

Easiflow Meters Specification

Construction:

Cone	Acetal
Viewing glass	Borosilicate glass
Calibrated spring	Stainless steel
Seal	Nitrile
Body	Glass filled nylon

Maximum working pressure:
10 bar.

Minimum working pressure:
1 bar.

Temperature range:
+5°C to +80°C - Oil.
+5°C to +60°C - Water.

Flow rate:
1 to 150 l/min.

Viscosity range:
10 to 200 centistokes (oil).

Accuracy:
±5% FSD.

Repeatability:
±1% FSD.

Connections:
1" BSP parallel threads.

Weight:
0.4kg.

Flowswitch Specifications

The Easiflow switch is a flow measuring device incorporating an AC/DC switch suitable for controlling valves or pump motors or for activating alarm signals.

General flowmeter specification:
See material details opposite.

Switch type specifications:
Magnetically operated reed switch.

Electrical details:

Voltage range	300Vac/dc
Maximum current	2.5Amps
Maximum load	100W resistive 70W inductive

CE

Installation Details

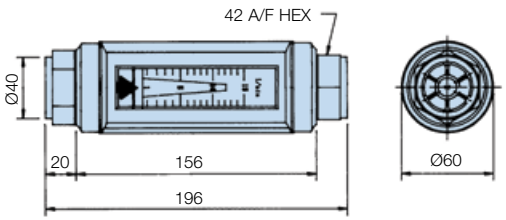

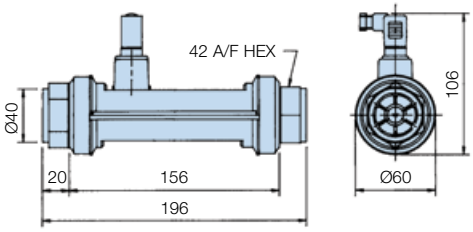

Ordering Information

Standard products table – Flowmeter only

Product number	Supersedes	Media	Flow range (l/min)
EF7731111220	EFW.0302	Water	2 - 30
EF7731112220	EFW.0502	Water	4 - 50
EF7731113220	EFW.1002	Water	5 - 100
EF7731114220	EFW.1502	Water	10 - 150
EF7731110120	EFL.0151	Oil	1 - 15
EF7731111120	EFL.0301	Oil	2 - 30
EF7731112120	EFL.0501	Oil	4 - 50
EF7731113120	EFL.1001	Oil	5 - 100
EF7731114120	EFL.1501	Oil	10 - 150
EF7731110220	EFW.0152	Water	1 - 15

Note 1: Part numbers featured with bold highlighted codes will ensure a 'standard' product selection.
Note 2: Alternate displayed part number selection will require you to contact Parker Filtration for availability.

Standard products table – Flowmeter plus one switch

Product number	Supersedes	Media	Flow range (l/min)	Switch range (l/min)
EF7731110221	ESW.015S1	Water	1 - 15	5 - 15
EF7731111221	ESW.030S1	Water	2 - 30	5 - 30
EF7731110121	ESL.015S1	Oil	1 - 15	5 - 15
EF7731111121	ESL.030S1	Oil	2 - 30	5 - 30
EF7731112121	ESL.050S1	Oil	4 - 50	10 - 50
EF7731113121	ESL.100S1	Oil	5 - 100	20 - 100
EF7731114121	ESL.150S1	Oil	10 - 150	30 - 150
EF7731112221	ESW.050S1	Water	4 - 50	10 - 50
EF7731113221	ESW.100S1	Water	5 - 100	20 - 100
EF7731114221	ESW.150S1	Water	10 - 150	30 - 150

Note 1: Part numbers featured with bold highlighted codes will ensure a 'standard' product selection.
Note 2: Alternate displayed part number selection will require you to contact Parker Filtration for availability.

Dataflow - 4 to 20mA and Pulse Output Flow Transmitters

Flowmeters

Features & Benefits

- 4 to 20mA output.
- Pulse output available for totalising/batching.
- Works in any plane.
- Accepts reverse flow.
- Maximum flow 150 l/min.
- Negligible pressure drop.
- Pressures up to 10 bar.
- Low cost. Simple to install.
- For use with most liquids.
- Factory calibrated. Accuracy ±2%.
- DIN 43650 plug connection (included).

Specification

Construction:
Borosilicate glasstube.
Nitrile seals.
Body – Glass filled nylon.
Rotor and locater – Acetal.
Washers and shaft – Stainless steel.
Rotor tips – Stainless steel.

Max. working pressure:
10 bar oil/water.

Flow indication:
Min: 2 l/min.
Max: 150 l/min.
Accepts reverse flow.

Accuracy:
±2% FSD.

Temp range:
+5°C to +80°C oil.
+5°C to +60°C water.

Connections:
1" BSP parallel threads.

Weight:
0.7Kg.

Calibration 4 to 20mA:
4mA = 0 l/min,
20mA = 100 l/min.

Calibration pulse output per litre:
'K' factors.
Oil = 51.14
Water = 44.25

CE

Electrical details 4 to 20mA:
Supply = 24Vdc.

Pulse output:
Supply = 24Vdc.
(open collector transistor).

Digital Display Specification (DFT 990 only)

For indicator options please refer to MS150 section of the catalogue, reference DDU1001 and DDU1002 indicators

Installation Details

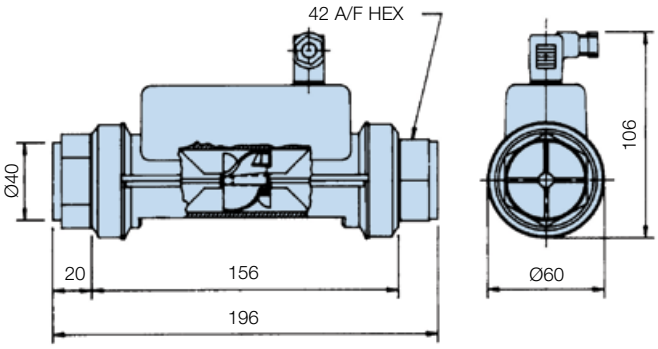

Ordering Information

Standard products table

Product number	Supersedes	Description
DFT980	DFT.980	Dataflow "Pulse" output transmitter
DFT990	DFT.990	Dataflow 4-20mA transmitter

Note 1: Part numbers featured with bold highlighted codes will ensure a 'standard' product selection.
Note 2: Alternate displayed part number selection will require you to contact Parker Filtration for availability.

Dataflow 4-20mA transmitter can be connected to a Digital Display Unit (DDU1001 or DDU1002)

4 to 20mA On-Site Calibration

Set your system to zero flow. Connect a multimeter across terminals 1 (+20mA) and ⏚ (0mA) (Dia. 2). Set the zero to read 4mA on your multimeter (Dia. 1). Set your system to full flow and set the span to read 20mA on your multimeter. (Dia. 1)

Note: Minimum span setting = 30 l/min

Diagram 1

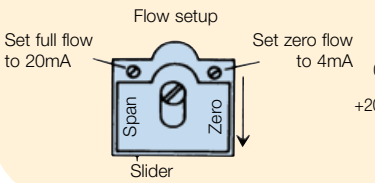

Diagram 2

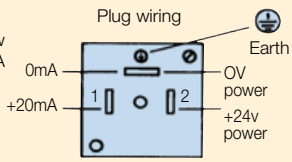

Parker Hannifin
Hydraulic Filter Division Europe

FDHB500UK/Flow

Dataflow Compact - Inline Flow Transmitter

Flowmeters

Features & Benefits

- Pulse output signal for flows up to 25 l/min.
- Lightweight and robust.
- Operates in any plane. Simple to install.
- Low cost flow measurement.
- Negligible pressure drop.
- Accepts reverse flow.
- 3/8 BSP male connection.
- Water or compatible clear fluids only.
- Ideal for washing machines, showers and vending machines.

Specification

Construction:
Body Grilamid – TR55.
Rotor 18% PTFE filled nylon.
Shaft Stainless steel.
Shaft Retainers Grilamid TR55.

Operation:
Infra-red.

Maximum working pressure:
20 bar.

Pressure drop:
Max 0.1 bar at 15 l/min.

Flow range:
1 to 25 l/min.
(Accepts reverse flow).

Calibration:
'K' Factor 752 pulses per litre, typical.
Subject to application.

Accuracy:
±2% typical.

Repeatability:
±1%.

Temperature range:
+5°C to +70°C.

Overall dimensions:
52mm x 29mm x 27mm.

Weight:
16 grams.

Connections:
3/8 BSP

Cable length:
300mm.

Power supply:
5 Vdc.

Output signal:
5 Vdc - square wave

Installation Details

Red wire	+5V supply
Green wire	Output signal
Blue wire	0V supply

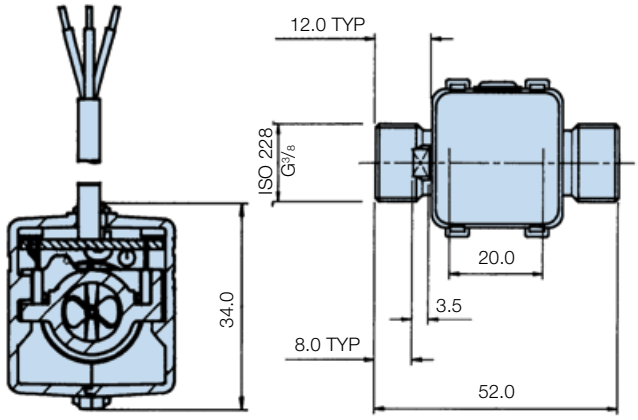

Dataflow Compact – The Low Cost Transmitter

The Dataflow Compact Transmitter was designed to offer OEM's and end users alike a means of monitoring low flows on liquids with an electronic output signal – but at LOW COST. Fluid passes through the one piece sensor body impacting on the twin vaned turbine rotor, causing it to rotate at a speed proportional to the flow rate. Two opposing photo-transistors are mounted either side of the rotor and externally of the clear sensor body, these generate a continuous signal.

As the rotor spins each blade obscures the infra red signal. This is then converted into an industry standard pulse output signal – compatible with inexpensive display units for flow rate, totalising, batch control and large, central control systems. The lightweight Grilamid body with its virtually unrestricted flow path, offers negligible pressure drop for flows up to 25 l/min and withstanding pressures up to 20 bar.

Flow Rate • Totalising • Batch Control and applications in many industries

Dataflow Compact Transmitters are small and very robust having been developed and tested extensively in industry applications where space is a restriction. Dataflow Compact with its Grilamid body and BSP connections can be installed almost anywhere and once installed will give accurate and reliable output signalling.

Ordering Information

Standard products table

Product number	Supersedes	Description
DFC9000100	DFC.9000.100	Dataflow compact flow transmitter

Note 1: Part numbers featured with bold highlighted codes will ensure a 'standard' product selection.
Note 2: Alternate displayed part number selection will require you to contact Parker Filtration for availability.

Parker Hannifin
Hydraulic Filter Division Europe
FDHB500UK/Flow

Flowline - Oil and Water Calibrated Flowmeters (Brass Version)

Flowmeters

Features & Benefits

- Works in any plane.
- Pressure up to 350 bar (5000 psi).
- Flows up to 360 l/min.
- Accuracy ±5% FSD.
- Repeatability ±1% FSD.
- Direct reading.
- Relatively insensitive to viscosity changes.
- Oil or water calibrated.
- Optional reed switch upgrade.

Specification

Construction:
Brass body to BS 2874 CZ114.

Maximum working pressure:
Up to 350 bar.

Minimum working pressure:
1 bar.

Temperature range:
Brass –20°C to +90°C.

Calibration:
Oil Specific gravity 0.856 at 20°C.
Water Specific gravity 1.0 at 20°C.

Viscosity range:
10 to 200 cSt (oil).

Accuracy:
±5% FSD.

Repeatability:
±1% FSD.

Min. scale reading:
10% FSD.

Connections:
BSP parallel threads.

Wetted/non-wetted parts:
Consult Parker for information.

1/4", 1/2" and 3/4" BSP thread options (1 1/4" version on next page)

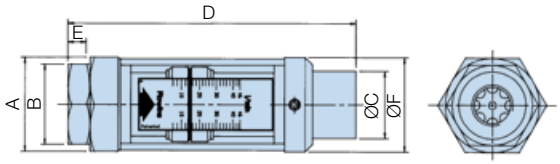

Note: To add an electrically operated reed switch to your flowmeter please order B26307

Ordering Information - Oil

Standard products table

Brass flowmeter for oil					Dimensions (mm)						
Product number	Supersedes	Ports BSP	Flow range (l/min)	Maximum pressure (bar)	A (A/F Hex)	B (A/F Hex)	C	D	E	F	Weight (kg)
FM26122212	FM.26 122 212	1/4	0.5 - 4.5	350	32	29	19	123	7	32	0.4
FM26122312	FM.26 122 312	1/4	1 - 9	350	32	29	19	123	7	32	0.4
FM26222112	FM.26 222 112	1/2	2 - 20	350	41	38	32	165.5	12.5	46	0.9
FM26222212	FM.26 222 212	1/2	5 - 46	350	41	38	32	165.5	12.5	46	0.9
FM26322112	FM.26 322 112	3/4	5 - 55	350	58	46	43	190	15	58	1.75
FM26322212	FM.26 322 212	3/4	10 - 110	350	58	46	43	190	15	58	1.75
FM26122112	FM.26 122 112	1/4	0.2 - 2.0	350	32	29	19	123	7	32	0.4
FM26422112	FM.26 422 112	1 1/4	20 - 180	210	For intallation details for 1 1/4 flowmeters see next page						8.0
FM26422212	FM.26 422 212	1 1/4	30 - 270	210							8.0
FM26422312	FM.26 422 312	1 1/4	40 - 360	210							8.0

Ordering Information - Water

Standard products table

Brass flowmeter for water					Dimensions (mm)						
Product number	Supersedes	Ports BSP	Flow range (l/min)	Maximum pressure (bar)	A (A/F Hex)	B (A/F Hex)	C	D	E	F	Weight (kg)
FM26222122	FM.26 222 122	1/2	2 - 20	350	41	38	32	165.5	12.5	46	0.9
FM26222222	FM.26 222 222	1/2	5 - 46	350	41	38	32	165.5	12.5	46	0.9
FM26322122	FM.26 322 122	3/4	5 - 55	350	58	46	43	190	15	58	1.75
FM26322222	FM.26 322 222	3/4	10 - 110	350	58	46	43	190	15	58	1.75
FM26122122	FM.26 122 122	1/4	0.2 - 2.0	350	32	29	19	123	7	32	0.4
FM26122222	FM.26 122 222	1/4	0.5 - 4.5	350	32	29	19	123	7	32	0.4
FM26122322	FM.26 122 322	1/4	1 - 9	350	32	29	19	123	7	32	0.4
FM26422122	FM.26 422 122	1 1/4	20 - 180	210	For intallation details for 1 1/4 flowmeters see next page						8.0
FM26422222	FM.26 422 222	1 1/4	30 - 270	210							8.0
FM26422322	FM.26 422 322	1 1/4	40 - 360	210							8.0

Note 1: Part numbers featured with bold highlighted codes will ensure a 'standard' product selection.
Note 2: Alternate displayed part number selection will require you to contact Parker Filtration for availability.

Flowline - Oil and Water Calibrated Flowmeters (Stainless Steel)

Flowmeters

Features & Benefits

- For flow measurement of corrosive or chemical media or in harsh locations.
- Manufactured in stainless steel 316.
- Works in any plane.
- Pressure up to 350 bar (5000 psi).
- Flows up to 360 l/min.
- Accuracy ±5% FSD.
- Repeatability ±1% FSD.
- Direct reading.
- Oil or water calibrated.
- Optional reed switch upgrade.

1¼" BSP option (¼", ½" and ¾" on previous page)

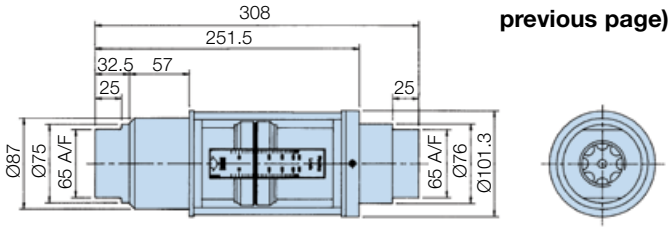

Specification

Construction:
Stainless steel to BS 970 316S.

Maximum working pressure:
Up to 350 bar.

Minimum working pressure:
1 bar.

Temperature range:
–20°C to +105°C.

Calibration:
Oil Specific gravity 0.856 at 20°C.
Water Specific gravity 1.0 at 20°C.

Viscosity range:
10 to 200 cSt (oil).

Accuracy:
±5% FSD.

Repeatability:
±1% FSD.

Min. scale reading:
10% FSD.

Connections:
BSP parallel threads.

Wetted parts:
Body, thread adaptor

Piston, etc: cone locknut:
Stainless Steel.

Flow cone:
BS 970 316S 16.

Magnet encapsulation:
Stainless steel BS970/1:1991. :316S31.

Spring:
Stainless steel to BS 2056 EN 58J.

Seal:
Fluoroelastomer.

Note: To add an electrically operated reed switch to your flowmeter please order B26307

Ordering Information - Oil

Standard products table

Stainless steel flowmeter for oil					Dimensions (mm)						
Product number	Supersedes	Ports BSP	Flow range (l/min)	Maximum pressure (bar)	A (A/F Hex)	B (A/F Hex)	C	D	E	F	Weight (kg)
FM26232112	FM.26 232 112	½	2 - 20	350	41	38	32	165.5	12.5	46	0.9
FM26332112	FM.26 332 112	¾	5 - 55	350	58	46	43	190	15	58	1.75
FM26332212	FM.26 332 212	¾	10 - 110	350	58	46	43	190	15	58	1.75
FM26132112	FM.26 132 112	¼	0.2 - 2.0	350	32	29	19	123	7	32	0.4
FM26132212	FM.26 132 212	¼	0.5 - 4.5	350	32	29	19	123	7	32	0.4
FM26132312	FM.26 132 312	¼	1 - 9	350	32	29	19	123	7	32	0.4
FM26232212	FM.26 232 212	½	5 - 46	350	41	38	32	165.5	12.5	46	0.9
FM26432112	FM.26 432 112	1¼	20 - 180	350	For intallation details for 1¼ flowmeters see above						8.0
FM26432212	FM.26 432 212	1¼	30 - 270	350							8.0
FM26432312	FM.26 432 312	1¼	40 - 360	350							8.0

Ordering Information - Water

Standard products table

Stainless steel flowmeter for water					Dimensions (mm)						
Product number	Supersedes	Ports BSP	Flow range (l/min)	Maximum pressure (bar)	A (A/F Hex)	B (A/F Hex)		D		F	
FM26132122	FM.26 132 122	¼	0.2 - 2.0	350	32	29	19	123	7	32	0.4
FM26132222	FM.26 132 222	¼	0.5 - 4.5	350	32	29	19	123	7	32	0.4
FM26132322	FM.26 132 322	¼	1 - 9	350	32	29	19	123	7	32	0.4
FM26232122	FM.26 232 122	½	2 - 20	350	41	38	32	165.5	12.5	46	0.9
FM26232222	FM.26 232 222	½	5 - 46	350	41	38	32	165.5	12.5	46	0.9
FM26332122	FM.26 332 122	¾	5 - 55	350	58	46	43	190	15	58	1.75
FM26332222	FM.26 332 222	¾	10 - 110	350	58	46	43	190	15	58	1.75
FM26432122	FM.26 432 122	1¼	20 - 180	350	For intallation details for 1¼ flowmeters see above						8.0
FM26432222	FM.26 432 222	1¼	30 - 270	350							8.0
FM26432322	FM.26 432 322	1¼	40 - 360	350							8.0

Note 1: Part numbers featured with bold highlighted codes will ensure a 'standard' product selection.
Note 2: Alternate displayed part number selection will require you to contact Parker Filtration for availability.

Flowline - Flowswitches

Flowmeters

Features & Benefits

- ‘Boxed’ two-switch type.
- Intrinsically safe versions (supplied complete with flowmeter).
- Maximum/minimum switching models.
- Maximum working pressure 350 bar. (min 1 bar)
- Flows from 2.0 to 110 l/min.
- Stainless steel – suitable for corrosive fluids.
- Stainless steel to BS970 316516.

Ordering Information

To order the required switching unit, simply add the appropriate prefix before the part numbers shown below.

Standard products table

Product number	Supersedes	Description	Switch Range (Typical)
FS643222112	FS.643 222 112	2 switches, 2 - 20 l/min (1/2 BSP) Oil	2 -12 l/min and 10-20 l/min
FS643222212	FS.643 222 212	2 switches, 5 - 46 l/min (1/2 BSP) Oil	6-24 l/m and 20-46 l/m
FS643322112	FS.643 322 112	2 switches, 5 - 55 l/min (3/4 BSP) Oil	5-30 l/min and 30-55 l/min
FS643322212	FS.643 322 212	2 switches, 10 - 110 l/min (3/4 BSP) Oil	10-50 l/min and 50-110 l/min

Product configurator

Brass flowswitch for oil or water						
Product number		Flow range and (port size)		Fluid type		Switch Range (Typical)
FS643	2 switches	**2221**	2 - 20 l/min (1/2 BSP)	**12**	Oil	2 -12 l/min and 10-20 l/min
FS67A	Intrinsically safe high switch	**2222**	5 - 46 l/min (1/2 BSP)	22	Water	20-24 l/m
FS67B	Intrinsically safe low switch	**3221**	5 - 55 l/min (3/4 BSP)			5-30 l/min
FS67C	Intrinsically safe hi/low switch	**3222**	10 - 110 l/min (3/4 BSP)			10-50 l/min and 50-110 l/min

Product configurator

Stainless steel flowswitch for oil or water						
Product number		Flow range and (port size)		Fluid type		Switch Range (Typical)
FS643	2 switches	**2321**	2 - 20 l/min (1/2 BSP)	**12**	Oil	2 -12 l/min and 10-20 l/min
FS67A	Intrinsically safe high switch	**2322**	5 - 46 l/min (1/2 BSP)	**22**	Water	24-46 l/m
FS67B	Intrinsically safe low switch	**3321**	5 - 55 l/min (3/4 BSP)			5-30 l/min
FS67C	Intrinsically safe hi/low switch	**3322**	10 - 110 l/min (3/4 BSP)			10-50 l/min and 50-110 l/min

Ordering example

Product number	Supersedes
FS643332212	**FS.643 332 212**

Note 1: Part numbers featured with bold highlighted codes will ensure a ‘standard’ product selection.
Note 2: Alternate displayed part number selection will require you to contact Parker Filtration for availability.

kowas.r.o.

Hydraulic Test Equipment

Flowmeters

Features & Benefits

- Speedy diagnosis of hydraulic circuit faults.
- Flows ranging from 2 to 360 l/min.
- Measuring flow, pressure and temperature.
- Fully Portable – No power source required.
- Hydrotrac unit for flows from 2 to 110 l/min available.
- Designed for oil applications only.

Specification

Flow range:
2 to 360 l/min.

Pressure range:
1 to 350 bar.

Temperature range:
0°C to +90°C.

Installation Details

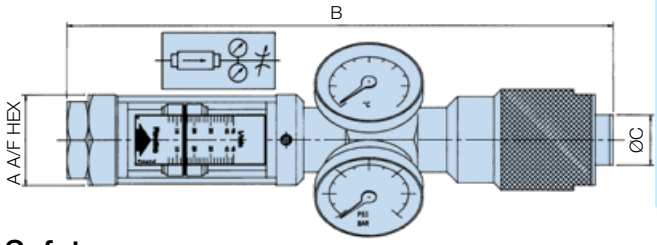

Safety

An axial flow restrictor valve is fitted which can be adjusted under full load from open to fully closed[1], and to complete the specification, a safety blow-out disc, set to fail at 455 bar is fitted to the manifold in a position facing away from the operator when reading the gauges normally. Two spare blow-out discs are supplied which are easily replaced by removing the hexagonal plug on the gauge manifold.

Additional blow out discs can be ordered - 41203B (Bag of 10)

Ordering Information

Standard products table

Product number	Flow range (l/min)	Weight Kg (with case)	Dimensions (mm)		
			A	B	C
4121	10 - 110	7.4	46	350	35
4120	5 - 55	7.4	46	350	35
4123	2 - 110	11.8	46	350	35
4168	20 - 180	13.85	75	496	87
4169	30 - 270	13.85	75	496	87
4170	40 - 360	13.85	75	496	87

Part number	Supersedes	Description
41203B	4120.3.B	Safety blow out discs x 10

Note 1: Part numbers featured with bold highlighted codes will ensure a 'standard' product selection.
Note 2: Alternate displayed part number selection will require you to contact Parker Filtration for availability.
Note 3: 4123 'Hydrotrac' unit features 2 flowmeters (2 - 20 and 10 - 110 l/min) and 1 pressure gauge and 1 thermometer.

Troubleshooting Test Units

Hydraulic Test Units are designed specifically for the speedy diagnosis of hydraulic circuit faults in mobile, marine and industrial systems using the normal range of mineral oils. Their rugged construction based mainly on mild steel, manganese bronze and acrylic materials makes them ideally suited for arduous use in the field.

Each unit is supplied in a convenient carrying case providing full protection and additional storage space for fittings. Because they need no power source such as batteries etc, they are always ready for instant use.

6 models are available to cover flow capacities up to 360 l/min and each incorporates a direct reading, uni-directional flow meter. The meter, which is both self cleaning and reasonably tolerant of contaminated fluids is coupled to a manifold that houses a glycerine-filled pressure gauge calibrated 0 to 350 bar and a dial-type thermometer with a 0°C to 100°C range.

Unit can only operate up to 90°C.

For further convenience the scale on the flow meter can be rotated to ensure visibility in any situation and the installed attitude of the assembly is not critical, though whenever possible the unit should be mounted with pressure gauge vertical and gauge case relief valve uppermost. The unit is designed for flow to be in the direction of the arrow on the flowmeter scale and must not be installed with the flow reversed.

[1] Note: Permissable allowed see page <50ml/min at 350 bar (5076 psi)

Flow Products - For Compressed Air Applications

Flowmeters & Monitors

Features & Benefits

Ⓐ Flowline Flowswitches and Flowmeters

- Calibrated for direct reading of compressed air at 7 bar.
- Works in any plane.
- Brass or stainless steel models available in 4 sizes.
- Calibrated at 7 bar and 20°C.
- Flow ranges from 2 to 600 SCFM.
- Pressure 1-41 bar max.
- Optional reed switch upgrade.

Ⓑ Loflow Air Flowmeters

- Flow measurement from 1.1 to 720 l/min. Max 10 bar rating.

Ⓒ Compressed Air Test Equipment

- 6 models available – 1/4", 3/4" and 1 1/4" BSP.
- Air flow range 2 to 600 SCFM.
- Pressure 1-41 bar max.

Specification

Full technical specifications for the Flowmeter, Flowswitch, LoFlow and test equipment products are provided in the respective pages for these products.

Ordering Information

Standard products table

Brass flowmeter for air			Flow range		
Product number	Supersedes	Ports BSP	SCFM	l/sec	Maximum working pressure (bar)
FM26123332	FM.26 123 332	1/4	2 - 20	1 - 10	41
FM26223132	FM.26 223 132	1/2	5 - 50	2 - 25	41
FM26223232	FM.26 223 232	1/2	10 - 110	5 - 50	41
FM26323132	FM.26 323 132	3/4	15 - 125	6 - 60	41
FM26323232	FM.26 323 232	3/4	20 - 225	10 - 100	41
FM26423132	FM.26 423 132	1 1/4	40 - 400	20 - 200	25
FM26423232	FM.26 423 232	1 1/4	60 - 600	30 - 300	25

Standard products table - LoFlow

Product number	Supersedes	Ports (BSPT male)	Flow range	Float material
LF801450	LF.3007E	1/4 - 3/4	1.1 - 8.0 l/min	Acetal
LF802455	LF.3050E	3/4 - 3/4	10 - 50 l/min	Acetal
LF802452	LF.3135E	3/4 - 3/4	20 - 135 l/min	Acetal
LF802454	LF.3720E	3/4 - 3/4	2 - 12 l/sec	S/Steel
LF801451	LF.3021E	1/4 - 3/4	4 - 22 l/min	S/Steel
LF802453	LF.3330E	3/4 - 3/4	1.0 - 5.5 l/sec	S/Steel

Standard products table

Stainless steel flowmeter for air			Flow range		
Product number	Supersedes	Ports BSP	SCFM	l/sec	Maximum working pressure (bar)
FM26133332	FM.26 133 332	1/4	2 - 20	1 - 10	41
FM26233132	FM.26 233 132	1/2	5 - 50	2 - 25	41
FM26233232	FM.26 233 232	1/2	10 - 110	5 - 50	41
FM26333132	FM.26 333 132	3/4	15 - 125	6 - 60	41
FM26333232	FM.26 333 232	3/4	20 - 225	10 - 100	41
FM26433132	FM.26 433 132	1 1/4	40 - 400	20 - 200	41
FM26433232	FM.26 433 232	1 1/4	60 - 600	30 - 300	41

Product configurator

Brass flowswitch for air						
Product number		Flow range SCFM and (l/sec)		Ports (BSP)	Fluid type	
FS643	2 switches	2231	5 - 50 (2 - 25)	1/2	32	Air
FS67A	Intrinsically safe high switch	2232	10 - 110 (5 - 50)	1/2		
FS67B	Intrinsically safe low switch	3231	15 - 125 (6 - 60)	3/4		
		3232	20 - 225 (10 - 100)	3/4		

Ordering example

Product number	Supersedes
FS643323232	FS.643 323 232

Note 1: Part numbers featured with bold highlighted codes will ensure a 'standard' product selection.
Note 2: Alternate displayed part number selection will require you to contact Parker Filtration for availability.
Note 3: To add an electrically operated reed switch to your flowmeter please order B.26307