Dimensions Millimeters (Inches)

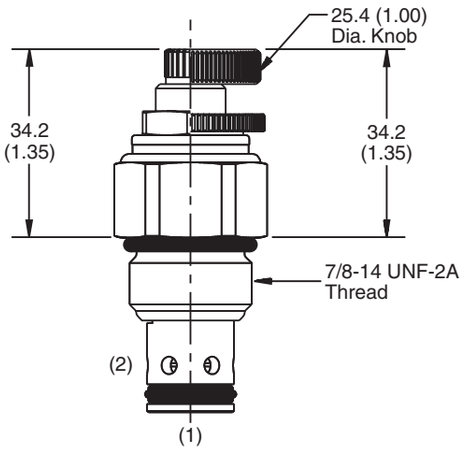

Screw/Knob Version

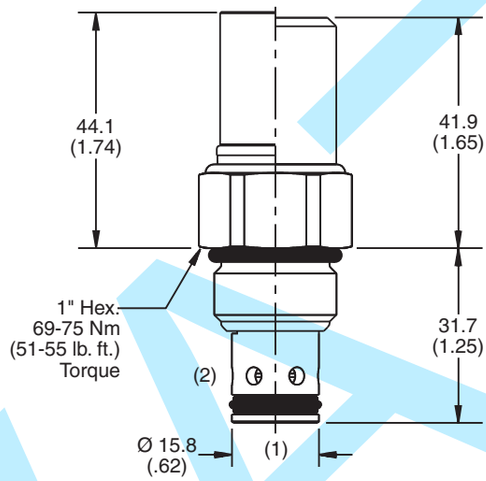

Fixed Cap/Tamper Resistant Version

THIRD-ANGLE PROJECTION

Ordering Information

RAH101	☐	☐	☐	—	☐	—	☐	☐
10 Size Pilot Operated Relief Valve	Adjustment Style	Pressure Range	Seals		Optional Pressure Setting		Body Material	Port Size

Code	Adjustment Style / Kit No.
F	Fixed style, preset at factory.
K	Knob Adjust (717784-10)
S	Screw Adjust
T	Tamper Resistant Cap (125407)

Code	Pressure Range
10	6.9 - 69 Bar (100 - 1000 PSI) Standard Setting: 34.5 Bar (500 PSI) @ crack pressure, approximately .95 LPM (.25 GPM)
20	6.9 - 138 Bar (100 - 2000 PSI) Standard Setting: 69 Bar (1000 PSI) @ crack pressure, approximately .95 LPM (.25 GPM)
30	13.8 - 207 Bar (200 - 3000 PSI) Standard Setting: 103.5 Bar (1500 PSI) @ crack pressure, approximately .95 LPM (.25 GPM)
50	13.8 - 345 Bar (200 - 5000 PSI) Standard Setting: 172.4 Bar (2500 PSI) @ crack pressure, approximately .95 LPM (.25 GPM)

Code	Seals / Kit No.
Omit	"D"-Ring / (SK10-2)
N	Nitrile / (SK10-2N)
V	Fluorocarbon / (SK10-2V)

Optional Pressure Setting
Pressure ÷ 10 i.e. 235 = 2350 PSI (Omit if standard setting is used) Setting Range: 100 to 5000 PSI All settings at crack pressure, approximately .95 LPM (.25 GPM)

Code	Body Material
Omit	Steel
A	Aluminum

Code	Port Size	Body Part No.
Omit	Cartridge Only	
4P	1/4″ NPTF	(B10-2-*4P)
6P	3/8″ NPTF	(B10-2-*6P)
8P	1/2″ NPTF	(B10-2-*8P)
6T	SAE-6	(B10-2-*6T)
T6T	SAE-6	(B10-2-T6T)†
8T	SAE-8	(B10-2-*8T)
T8T	SAE-8	(B10-2-T8T)†
6B	3/8″ BSPG	(B10-2-6B)†

** Add "A" for aluminum, omit for steel.*
† Steel body only.