KH-A-S Ball valve with SAE Flange adapter connection

SAE Flange (ISO 6162-1/-2) / Ball valve 2/2 way steel

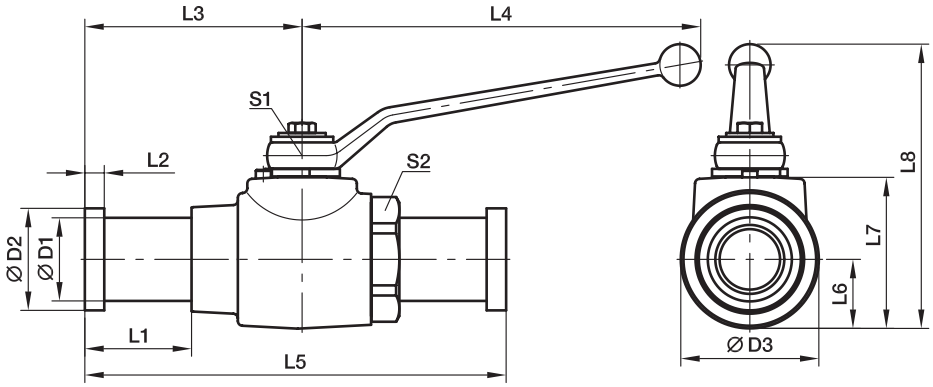

3000 PSI Series

Nom. flange size SAE (in)	ISO (DN)	D1	D2	D3	L1	L2	L3	L4	L5	L6	L7	L8	S1	S2	O-ring	Weight (steel) kg/piece	Order code*	PN (bar)[1] S
1/2	12	24	30.2	35	42.0	6.7	75.5	112	151.0	17.0	40	92	10	32	18.66×3.53	0.9	**KH12A32**	350
3/4	20	32	38.1	45	43.0	6.7	81.0	187	162.0	24.0	55	113	14	41	25.00×3.53	1.7	**KH20A33**	315
1	25	38	44.4	55	38.9	8.0	89.0	187	178.0	26.0	60	118	14	50	32.92×3.53	2.5	**KH25A34**	315
1 1/4	32	43	50.8	73	40.3	8.0	99.0	227	190.5	36.5	80	155	17	60	37.70×3.53	3.1	**KH32A35**	276
1 1/2	40	50	60.3	85	58.3	8.0	115.5	227	231.0	42.5	90	165	17	70	47.22×3.53	4.3	**KH40A36**	207
2	50	62	71.4	99	50.9	9.5	116.0	227	232.0	49.5	104	179	17	85	56.74×3.53	5.8	**KH50A38**	207

6000 PSI Series

1/2	12	24	31.7	35	42.0	7.7	75.5	112	151.0	17.0	40	92	10	32	18.66×3.53	1.0	**KH12A62**	420
3/4	20	32	41.3	45	49.0	8.8	87.0	187	174.0	24.0	55	113	14	46	25.00×3.53	1.9	**KH20A63**	315
1	25	38	47.6	55	49.0	9.5	99.0	187	198.0	26.0	60	118	14	50	32.92×3.53	2.8	**KH25A64**	315
1 1/4	32	44	54.0	73	56.5	10.3	115.0	227	223.0	36.5	80	155	17	60	37.70×3.53	3.3	**KH32A65**	315
1 1/2	40	51	63.5	85	83.5	12.6	14.5	227	281.0	42.5	90	165	17	70	47.22×3.53	4.8	**KH40A66**	315
2	50	67	79.4	99	93.0	12.6	158.0	227	316.0	49.5	104	179	17	85	56.74×3.53	7.4	**KH50A68**	315

[1]) Pressure shown = Item deliverable

The pressure specification PN for quarter turn ball valves applies to the design factor 1.5 (according DIN 3230 T5 and ISO 5208).

$$\frac{\text{PN (bar)}}{10} = \text{PN (MPa)}$$

Materials:
Body made of steel, coating DIN 50938-FE/A/T4,
ball of hard chrome plated carbon steel, stem of zinc plated steel.

Seals:
Ball seat of POM (e.g. Delrin), stem seal of NBR (e.g. Perbunan).

Standard surface: bronzed
For Cr(VI)-free please add CF
Example: **KH12A32CFX**

Applications:
Suitable for petroleum-based hydraulic fluid, lubricants and fuel oil.
For air applications suitable up to 100 bar.

Temperature range:
–10 up to +100° C