V8OMLO 45° male stud elbow

O-Lok® ORFS tube end / Male metric thread – O-ring + retaining ring

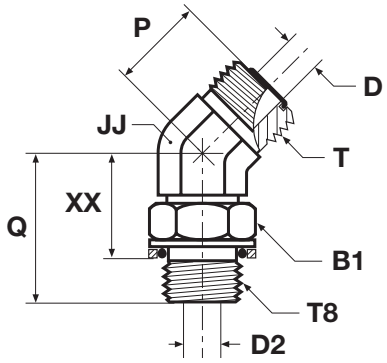

Tube O.D. mm	Tube O.D. in.	Thread metric T8	Thread UN/UNF-2A T	B1 mm	D mm	D2 mm	JJ mm	P mm	Q mm	XX mm	Weight (steel) g/1 piece	O-Lok® Steel	PN (bar)
6	1/4	M12×1.5	9/16-18	17	5	4	14	16	30	20	44	**4M12V8OMLOS**	250
10	3/8	M16×1.5	11/16-16	19	7	7	19	19	33	22	82	**6M16V8OMLOS**	250
12	1/2	M14×1.5	13/16-16	17	10	6	19	20	31	20	92	**8M14V8OMLOS**	250
12	1/2	M18×1.5	13/16-16	22	10	9	19	20	37	25	110	**8M18V8OMLOS**	250
14, 15, 16	5/8	M18×1.5	1-14	27	13	9	27	24	43	30	160	**10M18V8OMLOS**	250
14, 15, 16	5/8	M22×1.5	1-14	27	13	12	27	23	43	30	190	**10M22V8OMLOS**	250
18, 20	3/4	M27×2	1 3/16-12	32	16	15	30	26	50	34	288	**12M27V8OMLOS**	250
22, 25	1	M33×2	1 7/16-12	38	21	20	36	30	52	36	300	**16M33V8OMLOS**	140
28, 30, 32	1 1/4	M42×2	1 11/16-12	50	26	26	41	32	54	37	444	**20M42V8OMLOS**	140
35, 38	1 1/2	M48×2	2-12	55	32	32	50	37	56	37	568	**24M48V8OMLOS**	140

O-Lok® is delivered with NBR elastomeric seals as standard. For more details on other seal materials see page J73–J74.

Part numbers shown are part of our current manufacturing programme.

Imperial and metric parts may vary in hexagon dimensions.

$$\frac{\text{PN (bar)}}{10} = \text{PN (MPa)}$$

J