S6MX Swivel nut branch tee

Triple-Lok® 37° Flare ends / Triple-Lok® 37° Flare female swivel end
SAE 070433 MS51524

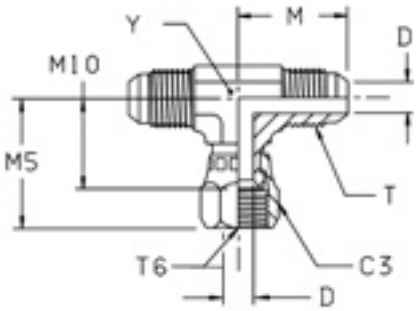

Tube O.D. mm	Tube O.D. in.	Thread UN/UNF-2A T	Thread UN/UNF-2B T6	C3 mm	D mm	M mm	M5 mm	M10 mm	Y mm	Weight (steel) g/1 piece	Triple-Lok® Steel	Triple-Lok® Stainless Steel	PN (bar) S	PN (bar) SS
6	1/4	7/16-20	7/16-20	16	4	23	25	17	11	44	**4 S6X-S**	**4 S6X-SS**	500	350
8	5/16	1/2-20	1/2-20	17	6	24	27	17	13	58	**5S6MXS**	**5 S6X-SS**	420	350
10	3/8	9/16-18	9/16-18	19	8	27	32	22	14	71	**6S6MXS**	**6 S6X-SS**	350	350
12	1/2	3/4-16	3/4-16	22	10	32	35	24	19	133	**8S6MXS**	**8 S6X-SS**	350	350
14, 15,16	5/8	7/8-14	7/8-14	27	12	37	41	28	22	203	**10S6MXS**	**10 S6X-SS**	350	350
18, 20	3/4	1 1/16-12	1 1/16-12	32	16	42	44	30	27	328	**12S6MXS**	**12 S6X-SS**	350	350
25	1	1 5/16-12	1 5/16-12	38	22	46	51	36	33	483	**16S6MXS**	**16 S6X-SS**	250	250
28, 30, 32	1 1/4	1 5/8-12	1 5/8-12	50	28	52	59	43	41	708	**20 S6X-S**	**20 S6X-SS**	250	210
35, 38	1 1/2	1 7/8-12	1 7/8-12	57	33	59	68	49	48	1100	**24 S6X-S**	**24 S6X-SS**	170	170

Order codes shown are part of our current manufacturing programme.

Imperial and metric parts may vary in hexagon dimensions.

$$\frac{\text{PN (bar)}}{10} = \text{PN (MPa)}$$

Pressure ratings – PN shown, apply to Steel and Stainless Steel versions of the product.