Parker

Ermeto Original
DIN fittings

KOVAZ.cz

Visual index

Fitting components

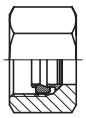

FM
p. I10

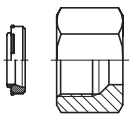

FORM
p. I12

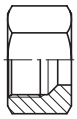

M
p. I14

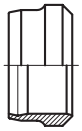

D
p. I15

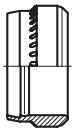

PSR
p. I15

DPR
p. I16

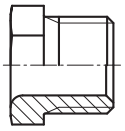

S
p. I17

Tube to tube

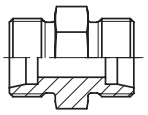

G
p. I18

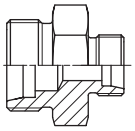

GR
p. I19

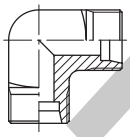

W
p. I20

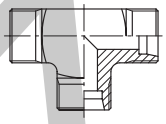

T
p. I21

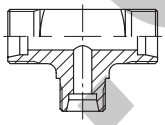

TR
p. I22

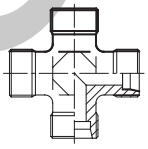

K
p. I24

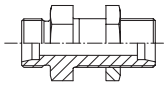

SV
p. I25

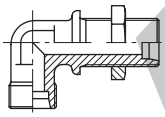

WSV
p. I26

Tube to swivel

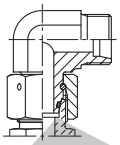

EW
p. I27

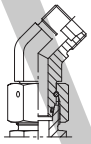

EV
p. I28

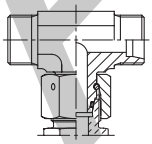

ET
p. I29

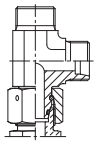

EL
p. I30

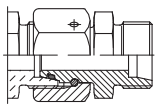

DA
p. I31

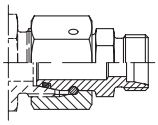

RED
p. I32

Swivel to swivel

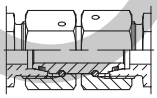

GZ
p. I36

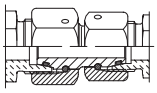

GZR
p. I37

Male stud connector

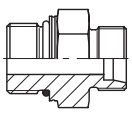

GEO
p. I39

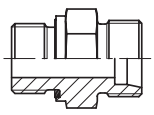

GE-M-ED
p. I40

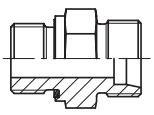

GE-R-ED
p. I41

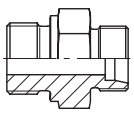

GE-R
p. I43

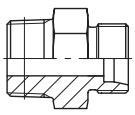

GE-R(KEG)
p. I45

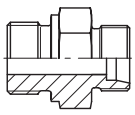

GE-M
p. I46

KOVAZ.CZ

Visual index

Male stud connector

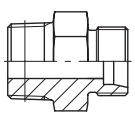

GE-M(KEG)
p. I47

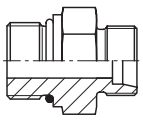

GE-UNF/UN
p. I48

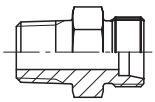

GE-NPT
p. I49

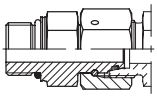

EGEO
p. I51

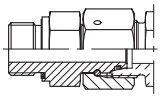

EGE-M-ED
p. I52

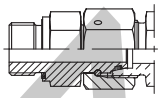

EGE-R-ED
p. I53

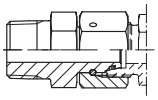

EGE-NPT
p. I54

Swivel adjustable

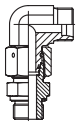

EW-M-ED
p. I55

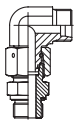

EW-R-ED
p. I56

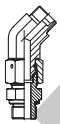

EV-M-ED
p. I57

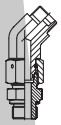

EV-R-ED
p. I58

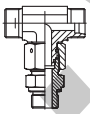

ET-M-ED
p. I59

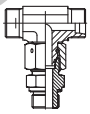

ET-R-ED
p. I60

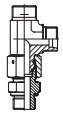

EL-M-ED
p. I61

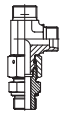

EL-R-ED
p. I62

Locknut adjustable

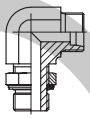

WEE-R
p. I63

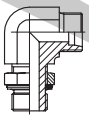

WEE-OR
p. I64

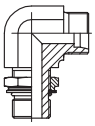

WEE-M
p. I64

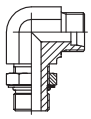

WEE-UNF
p. I64

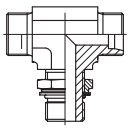

TEE-OR
p. I64

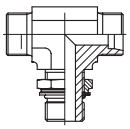

TEE-M
p. I64

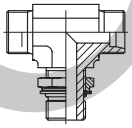

TEE-R
p. I64

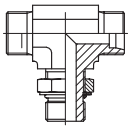

TEE-UNF
p. I64

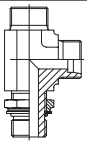

LEE-OR
p. I64

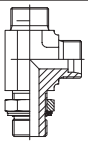

LEE-M
p. I64

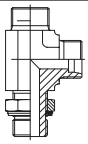

LEE-R
p. I64

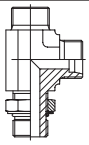

LEE-UNF
p. I64

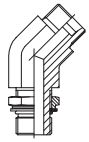

VEE-OR
p. I64

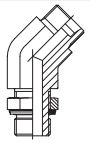

VEE-M
p. I64

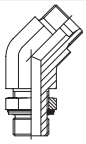

VEE-R
p. I64

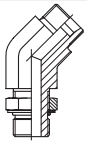

VEE-UNF
p. I64

KOVAZ.cz

Visual index

Banjo fittings

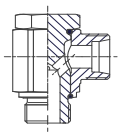

WHK-M-CS
p. I65

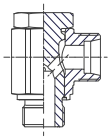

WHK-M
p. I66

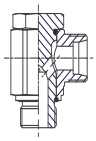

WHK-R-CS
p. I67

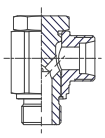

WHK-R
p. I68

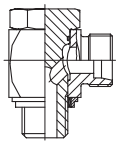

WH-M-KD (71)
p. I69

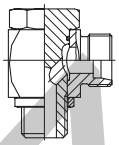

WH-M (71)
p. I70

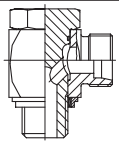

WH-R-KD (71)
p. I71

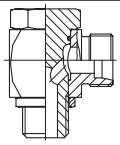

WH-R (71)
p. I72

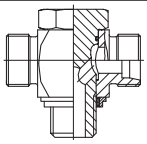

TH-M-KDS
p. I73

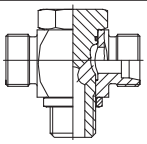

TH-M
p. I74

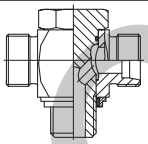

TH-R-KDS
p. I75

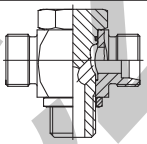

TH-R
p. I76

Non adjustable

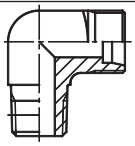

WE-NPT
p. I77

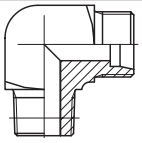

WE-M(KEG)
p. I78

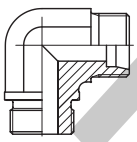

WE-M
p. I79

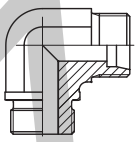

WE-R
p. I80

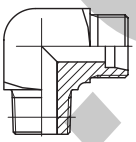

WE-R (KEG)
p. I81

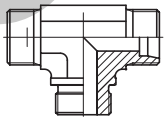

TE-M
p. I82

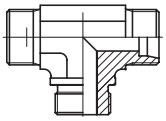

TE-R
p. I83

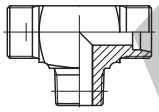

TE-R (KEG)
p. I84

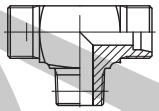

TE-M(KEG)
p. I85

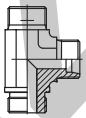

LE-M
p. I86

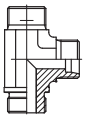

LE-R
p. I87

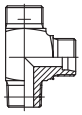

LE-R (KEG)
p. I88

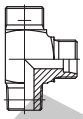

LE-M(KEG)
p. I89

Tube to female

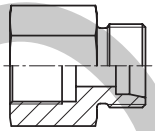

GAI-M
p. I90

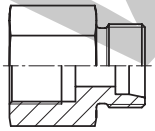

GAI-R
p. I91

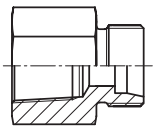

GAI-NPT
p. I92

Port reducers

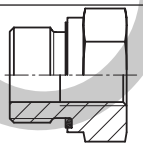

RI-ED
p. I93

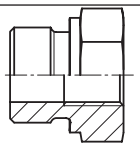

RI
p. I94

Pressure gauge adapter

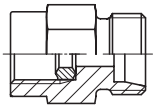

MAV
p. I95

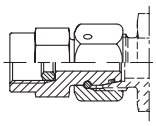

MAVE
p. I96

KOVAL.CZ

Visual index

Plugs

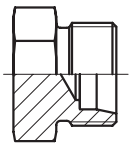

ROV
p. I97

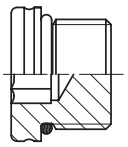

VSTI M-OR
p. I98

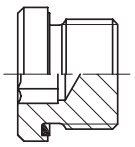

VSTI M/R-ED
p. I99

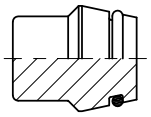

VKA
p. I100

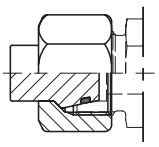

VKAM
p. I101

Components

GM
p. I102

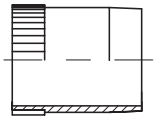

VH
p. I103

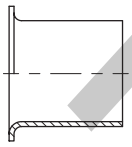

E
p. I104

DOZ
p. I105

ED
p. I106

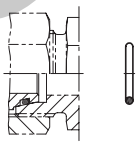

OR
p. I107

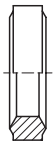

DKI
p. I110

KD
p. I110

DKA
p. I111

I

KOVAZ.CZ

How to order

DIN fittings

GE-R-ED Male stud connector

Male BSPP thread – ED-seal (ISO 1179) / EO 24° cone end

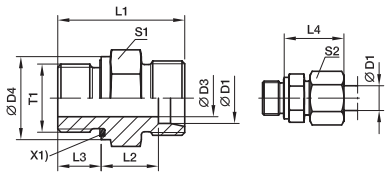

X1) Eolastic-sealing ED

Series	D1	T1	D3	D4	L1	L2	L3	L4	S1	S2	Weight g/1 piece	Order code*	PN (bar)[1] CF	71	MS
LL[2]	04	G 1/8 A	3	14	20.0	9.5	6.5	19	14	10	10	**GE04LLREDOMD**	100	100	63
	06	G 1/8 A	4	14	20.0	8.0	6.5	20	14	12	11	**GE06LLREDOMD**	100	100	63
L[3]	06	G 1/8 A	4	14	23.5	8.5	8.0	23	14	14	13	**GE06LREDOMD**	500	315	200
	06	G 1/4 A	4	19	29.0	10.0	12.0	25	19	14	28	**GE06LR1/4EDOMD**	500	315	200
	06	G 3/8 A	4	22	30.5	11.5	12.0	26	22	14	44	**GE06LR3/8EDOMD**	420	315	200
	06	G 1/2 A	4	27	33.0	12.0	14.0	27	27	14	61	**GE06LR1/2EDOMD**	400	315	200
	08	G 1/4 A	6	19	29.0	10.0	12.0	25	19	17	27	**GE08LREDOMD**	500	315	200
	08	G 1/8 A	4	14	24.5	9.5	8.0	24	14	17	16	**GE08LR1/8EDOMD**	500	315	200
	08	G 3/8 A	6	22	30.5	11.5	12.0	26	22	17	45	**GE08LR3/8EDOMD**	420	315	200
	08	G 1/2 A	6	27	33.0	12.0	14.0	27	27	17	74	**GE08LR1/2EDOMD**	400	315	200
	10	G 1/4 A	6	19	30.0	11.0	12.0	26	19	19	29	**GE10LREDOMD**	500	315	200
	10	G 1/8 A	4	14	25.5	10.5	8.0	25	17	19	21	**GE10LR1/8EDOMD**	500	315	200
	10	G 3/8 A	8	22	31.5	12.5	12.0	27	22	19	43	**GE10LR3/8EDOMD**	420	315	200
	10	G 1/2 A	8	27	34.0	13.0	14.0	28	27	19	71	**GE12LR1/8ED**	400	315	200
	12	G 3/8 A	9	22	31.5	12.5	12.0	27	22	22	41	**GE12LR1/4EDO**	420	315	200
	12	G 1/8 A	4	14	26.5	11.5	8.0	26	19	22	26		420	315	200
	12	G 1/4 A	6	19	31.0	12.0	12.0	27	19	22	3	**GE12LR1/2EDOM**	00	315	200
	12	G 1/2 A	10	27	34.0	13.0	14.0	28	27	22	6	**GE12LR3/4EDOM**	0	315	200
	12	G 3/4 A	10	32	37.0	14.0	16.0	29	32	22	1	**GE15LREDOMD**	0	160	100
	15	G 1/2 A	11	27	35.0	14.0	14.0	29	27	27			0	315	200
	15	G 3/8 A	9	22	32.5	13.5	12.0	29	24	27		**GE15LR3/8EDOM**	0	315	200
	15	G 3/4 A	12	32	38.0	15.0	16.0	30	32	27	11	**GE15LR3/4EDO**	0	160	100
	18	G 1/2 A	14	27	36.0	14.5	14.0	31	27	32	71	**18LREDO**	00	315	200
	18	G 3/8 A	9	22	33.5	14.0	12.0	30	27	32	66		400	315	200
	18	G 3/4 A	15	32	38.0	14.5	16.0	31	32	32	110		250	160	100
	22	G 3/4 A	18	32	40.0	16.5	16.0	33	32	36	102	**GE**	250	160	100
	22	G 1/2 A	14	27	38.0	16.5	14.0	33	32	36	91	**GE22LR1/2EDOMD**	250	160	100
	22	G 1 A	19	40	43.0	17.5	18.0	34	41	36	189	**GE22LR1EDOMD**	250	160	100
	28	G 1 A	23	40	43.0	17.5	18.0	34	41	41	170	**GE28LREDOMD**	250	160	100
	28	G 3/4 A	18	32	41.0	17.5	16.0	34	41	41	159	**GE28LR3/4EDOMD**	250	160	100
	28	G 1 1/4 A	24	50	46.0	18.5	20.0	35	50	41	316	**GE28LR11/4EDOMD**	250	160	100
	35	G 1 1/4 A	30	50	48.0	17.5	20.0	39	50	50	272	**GE35LREDOMD**	250	160	100
	35	G 1 A	23	40	46.0	17.5	18.0	39	46	50	226	**GE35LR1EDOMD**	250	160	100
	35	G 1 1/2 A	30	55	52.0	19.5	22.0	41	55	50	423	**GE35LR11/2EDOMD**	250	160	100
	42	G 1 1/2 A	36	55	52.0	19.0	22.0	42	55	60	343	**GE42LREDOMD**	250	160	100
	42	G 1 A	23	40	48.0	19.0	18.0	42	55	60	324	**GE42LR1EDOMD**	250	160	100
	42	G 1 1/4 A	30	50	50.0	19.0	20.0	42	55	60	348	**GE42LR11/4EDOMD**	250	160	100

[1] Pressure shown = item deliverable

[2] LL = very light series; [3] L = light series

$\frac{PN\ (bar)}{10}$ = PN (MPa)

Delivery without nut and ring. Information on ordering complete fittings or alternative sealing materials see page I7.

*Please add the **suffixes** below according to the material/surface required.

Material		Standard sealing material (no additonal. suffix needed)
Steel, zinc plated, Cr(VI)-free	GE18LREDOMDCF	
Stainless Steel	GE18LREDOMD71	NBR
Brass	GE18LREDOMDMS	VIT
		NBR

The corresponding order variant is contained in the table printed at the bottom of every DIN chapter.

The right way to order made easy!

Step 1
Selecting order code

1.1 All fitting sizes available in our fitting program are clearly listed in the index at the front of this catalogue.

1.2 Open the catalogue at the corresponding page containing detailed information of the product of your choice.

1.3 Select the required fitting size! The basic order code is printed in bold type on the right-hand side of the table of dimensions.

Example: **GE16SREDOMD**

Step 2
Selecting material, surface and sealing-material

Now simply add the corresponding code for the surface and material variant of the product you require to the basic order code.
This code is contained in the table printed at the bottom of every page.

2.1 Alternative sealing material

Example: Steel fitting with ED-seal in FKM material.
GE16SRED+OMD+**VIT+CF**
= GE16SREDVITOMDCF

Example: Stainless steel fitting with ED-seal in NBR material (e. g. Perbunan).
GE16SRED**OMD+NBR+71**
= GE16SREDNBROMD71

Step 3
When ordering fittings complete with nuts and rings

3.1. Metal sealed cutting rings PSR/DPR/D: For these types please delete the ‘OMD’ or ‘X’ suffixes.
Example: **GE16SREDCF**

3.2. Soft sealed EO-2 functional nut: For these types please delete the ‘OMD’ or ‘X’ suffixes and add a **‘Z’** before the series suffix (LL, L, S)
Example: **order with EO-2 functional nut**
GE16**(+Z)**SREDCF
= GE16ZSREDCF

Perbunan = registered trademark of Bayer

KOMEZ

How to order EO-Fittings:

Nomenclature

Example: **GE16ZSR3/8ED CF**

Type
Code for shape or style see visual index

Tube-O.D. Dia in mm
Example:
16 16 mm Dia

Series

LL	Very Light
L	Light
S	Heavy

PSR/DPR/EO-2 Version

(blank)	PSR/DPR/D Cutting Ring D for LL-Series and brass Progressivring DPR for stainless steel Progressive Stop Ring PSR for steel
Z	EO-2

Thread type and size

Type

M…	Metric parallel
M…KEG	Metric tapered
R…	BSPP
R…KEG	BSPT
…UN/UNF	SAE straight
…NPT	Pipe thread

Size

No size:	standard Thread size

Example:
1/2 1/2″
(only shown on jump sizes)

Seal type

(blank)		Standard seal
	ISO 6149	O-ring
	M/R	Metal sealing edge
	M/R KEG	Tapered thread
	UN/UNF	O-ring
	NPT	Tapered thread
ED	M/R	Eolastic seal
KD	WH/TH	Plastic banjo seal
KDS	WH/TH	Elastomeric banjo seal

Fitting material/coating

CF	Steel
71	Stainless steel
MS	Brass
(blank)	Steel, black phosphated (Special)

Assembly

OMD	Without nut and ring, but including all other components such as seals
X	Body only Basic fitting body without any nut, ring, seal or other Component

Seal material

NBR	Nitrile Rubber (Omitted for steel and brass fittings)
VIT	Fluorocarbon FKM (Omitted for stainless steel fittings)

Examples

Order code	Description
GE12ZSR1/2EDCF	Straight male stud, EO-2, 20 mm tube O.D., heavy series, G 1/2 BSPP, Eolastic seal, complete with nut and ring, steel fitting, all seals NBR
GE12LR71X	Straight male stud, 12 mm tube O.D., light series, G 3/8 BSPP, metal seal type B, stainless steel fitting, body only
EL38VITOMDCF	Adjustable swivel nut run tee 38 mm tube O.D., heavy series, steel fitting without nut and ring. Swivel nut end with FKM seal
DOZ04LL	Spare seal for EO-2 joints, 4 mm O.D., very light series, steel with nitrile rubber seal

Perbunan = registered trademark of Bayer

KOVAZ.CZ

Codes for fittings/styles shapes

D	Cutting ring – EO 24° cone end
DA	Distance piece adapter – EO 24° DKO swivel/EO 24° cone end
DKA	Sealing ring for banjo fittings WH/TH
DKI	Sealing ring for pressure gauge connectors
DOZ	EO-2 Soft sealing ring
DPR	Progressive ring – EO 24° cone end
E	Tube/hose insert for plastic tubing
ED	Eolastic soft seal (for BSPP and metric parallel threads)
EGE-M-ED	Swivel connector – Male metric thread – ED-seal (ISO 9974)/EO 24° DKO swivel
EGE-NPT	Swivel connector – Male NPT thread (SAE J476)/EO 24° DKO swivel
EGEO	Swivel connector – Male metric thread – O-ring (ISO 6149)/EO 24° DKO swivel
EGE-R-ED	Swivel connector – Male BSPP thread – ED-seal (ISO 1179)/EO 24° DKO swivel
EL	Swivel nut run tee – EO 24° cone end/EO 24° DKO swivel
EL-M-ED	Assembled adjustable swivel run tee – EO 24° cone end/Male metric thread – ED-seal (ISO 9974)
EL-R-ED	Assembled adjustable swivel run tee – EO 24° cone end/Male BSPP thread – ED-seal (ISO 1179)
ET	Swivel nut branch tee – EO 24° cone end/EO 24° DKO swivel
ET-M-ED	Assembled adjustable swivel branch tee – EO 24° cone end/Male metric thread – ED-seal (ISO 9974)
ET-R-ED	Assembled adjustable swivel branch tee – EO 24° cone end/Male BSPP thread – ED-seal (ISO 1179)
EV	Swivel nut 45° elbow – EO 24° cone end/EO 24° DKO swivel
EV-M-ED	Assembled adjustable swivel 45° elbow – EO 24° cone end/Male metric thread – ED-seal (ISO 9974)
EV-R-ED	Assembled adjustable swivel 45° elbow – EO 24° cone end/Male BSPP thread – ED-seal (ISO 1179)
EW	Swivel nut elbow – EO 24° cone end/EO 24° DKO swivel
EW-M-ED	Assembled adjustable swivel elbow – EO 24° cone end/Male metric thread – ED-seal (ISO 9974)
EW-R-ED	Assembled adjustable swivel elbow – EO 24° cone end/Male BSPP thread – ED-seal (ISO 1179)
FM	EO2 Functional nut
FORM	EO2-FORM Set
G	Union – EO 24° cone end
GAI-M	Female connector – Female metric thread (ISO 9974-1)/EO 24° cone end
GAI-NPT	Female connector – Female NPT thread (SAE 476)/EO 24° cone end
GAI-R	Female connector – Female BSPP thread (ISO 1179-1)/EO 24° cone end
GE-M	Male stud connector – Male metric thread – metal sealing edge (ISO 9974)/EO 24° cone end
GE-M (KEG)	Male stud connector – Male short metric taper thread (DIN 3852-1, type C)/EO 24° cone end
GE-M-ED	Male stud connector – Male metric thread – ED (ISO 9974)/EO 24° cone end
GE-NPT	Male stud connector – Male NPT thread (SAE J476)/EO 24° cone end
GEO	Male stud connector – Male metric thread – O-ring (ISO 6149)/EO 24° cone end
GE-R	Male stud connector – Male BSPP thread – metal sealing edge (ISO 1179)/EO 24° cone end
GE-R (KEG)	Male stud connector – Male short BSP taper thread (DIN 3852-2, type C)/EO 24° cone end
GE-R-ED	Male stud connector – Male BSPP thread – ED-seal (ISO 1179)/EO 24° cone end
GE-UNF/UN	Male stud connector – Male UNF/UN thread – O-ring (ISO 11926)/EO 24° cone end
GM	Locknut for bulkheads SV and WSV
GR	Straight reducer – EO 24° cone end
GZ	Swivel union – EO 24° DKO swivel
GZR	Swivel reducer – EO 24° DKO swivel
K	Union cross – EO 24° cone end
KD	Soft sealing ring for banjo fittings WH/TH from stainless steel
KDS	Soft sealing ring for banjo fittings SWVE, WH and TH from steel
LEE	Adjustable locknut run tee – EO 24° cone end/Adjustable thread
LE-M	Male stud run tee – EO 24° cone end/Male metric thread – metal sealing edge (ISO 9974)
LE-M (KEG)	Male stud run tee – EO 24° cone end/Male short metric taper thread (DIN 3852-1, Form C)
LE-R	Male stud run tee – EO 24° cone end/Male BSPP thread – metal sealing edge (ISO 1179)
LE-R (KEG)	Male stud run tee – EO 24° cone end/Male short BSP taper thread (DIN 3852-2, type C)
M	Nut- EO 24° Cone end
MAV	Pressure gauge connector – Female BSPP thread/EO 24° cone end
MAVE	Pressure gauge swivel connector – Female BSPP thread/EO 24° DKO swivel
OR	O-ring
PSR	Progressive stop ring – EO 24° cone end

KONAZ.CZ

Codes for fittings/styles shapes

RED	Tube end reducer – EO 24° DKO swivel/EO 24° cone end
RI	Thread reducer/expander – Male BSPP thread – metal sealing edge (ISO 1179)/Female BSPP thread (ISO 1179-1)
RI-ED	Thread reducer/expander – Male BSPP thread – ED-seal (ISO 1179)/Female BSPP thread (ISO 1179-1)
ROV	Blanking plug for tube ends – EO 24° cone end
S	Sleeve screw – for threaded ports according to DIN 3854
SV	Bulkhead union – EO 24° cone end
T	Union T – EO 24° cone end
TEE	Adjustable locknut branch tee – EO 24° cone end/Adjustable thread
TE-M	Male stud branch tee – EO 24° cone end/Male metric thread – metal sealing edge (ISO 9974)
TE-M (KEG)	Male stud branch tee – EO 24° cone end/Male short metric taper thread (DIN 3852-1, type C)
TE-R	Male stud branch tee – EO 24° cone end/Male BSPP thread – metal sealing edge (ISO 1179)
TE-R (KEG)	Male stud branch tee – EO 24° cone end/Male short BSP taper thread (DIN 3852-2, type C)
TH-M	High pressure banjo tee – EO 24° cone end/Male metric thread with metal sealing ring
TH-M-KDS	High pressure banjo tee – EO 24° cone end/Male metric thread with soft seal ring
TH-R	High pressure banjo tee – EO 24° cone end/Male BSPP thread with metal sealing ring
TH-R-KDS	High pressure banjo tee – EO 24° cone end/Male BSPP thread with soft seal ring
TR	Tee Reducer – EO 24° cone end
VEE	Adjustable locknut 45° elbow – EO 24° cone end/Adjustable thread
VH	Support sleeve for thin-walled metal tubing
VKA	Blanking plug for cones – EO 24° DKO swivel
VKAM	Blanking plug with nut for cone – EO 24° DKO swivel
VSTI M/R-ED	Blanking plug for ports – Male metric thread – ED-seal (ISO 9974) – Male BSPP thread – ED-seal (ISO 1179)
VSTI M-OR	Blanking plug for ports – Male metric thread – O-ring (ISO 6149)
W	Union elbow – EO 24° cone end
WEE	Adjustable locknut elbow – EO 24° cone end/Adjustable thread
WE-M	Male stud elbow – EO 24° cone end/Male metric thread – metal sealing edge (ISO 9974)
WE-M (KEG)	Male stud elbow – EO 24° cone end/Male short metric taper thread (DIN 3852-1. type C)
WE-NPT	Male stud elbow – EO 24° cone end/Male NPT thread (SAE J476)
WE-R	Male stud elbow – EO 24° cone end/Male BSPP thread – metal sealing edge (ISO 1179)
WE-R (KEG)	Male stud elbow – EO 24° cone end/Male short BSP taper thread (DIN 3852-2, type C)
WHK-M	High pressure banjo elbow – EO 24° cone end/Male metric thread with metal sealing ring
WHK-M-CS	High pressure banjo elbow – EO 24° cone end/Male metric thread with soft seal ring
WHK-R	High pressure banjo elbow – EO 24° cone end/Male BSPP thread with metal sealing ring
WHK-R-CS	High pressure banjo elbow – EO 24° cone end/Male BSPP thread with soft seal ring
WSV	Bulkhead elbow – EO 24° cone end

KOVMZ.CZ

FM EO2-Functional nut

for steel tubes

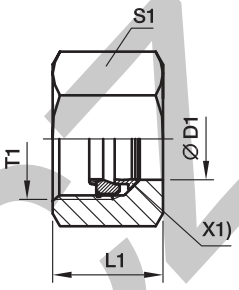

X1) Retaining ring

Series	D1	T1	L1	S1	Order code FM…CF Steel + Sealing Sealing NBR	PN (bar)	FM…VITCF Steel + Sealing Sealing FKM	PN (bar)	Weight g/1 piece
LL	04	M 08×1.0	11.0	10	**FM04LLCF**	100	–	100	5
	06	M 10×1.0	11.5	12	–	–	–	–	6
L	06	M 12×1.5	14.5	14	**FM06LCF**	500	**FM06LVITCF**	500	12
	08	M 14×1.5	14.5	17	**FM08LCF**	500	**FM08LVITCF**	500	17
	10	M 16×1.5	15.5	19	**FM10LCF**	500	**FM10LVITCF**	500	22
	12	M 18×1.5	15.5	22	**FM12LCF**	400	**FM12LVITCF**	400	30
	15	M 22×1.5	17.0	27	**FM15LCF**	400	**FM15LVITCF**	400	48
	18	M 26×1.5	18.0	32	**FM18LCF**	400	**FM18LVITCF**	400	70
	22	M 30×2.0	20.0	36	**FM22LCF**	250	**FM22LVITCF**	250	94
	28	M 36×2.0	21.0	41	**FM28LCF**	250	**FM28LVITCF**	250	106
	35	M 45×2.0	24.0	50	**FM35LCF**	250	**FM35LVITCF**	250	160
	42	M 52×2.0	24.0	60	**FM42LCF**	250	**FM42LVITCF**	250	244
S	06	M 14×1.5	16.5	17	**FM06SCF**	800	**FM06SVITCF**	800	20
	08	M 16×1.5	16.5	19	**FM08SCF**	800	**FM08SVITCF**	800	23
	10	M 18×1.5	17.5	22	**FM10SCF**	800	**FM10SVITCF**	800	37
	12	M 20×1.5	17.5	24	**FM12SCF**	630	**FM12SVITCF**	630	39
	16	M 24×1.5	20.5	30	**FM16SCF**	630	**FM16SVITCF**	630	72
	20	M 30×2.0	24.0	36	**FM20SCF**	420	**FM20SVITCF**	420	121
	25	M 36×2.0	27.0	46	**FM25SCF**	420	**FM25SVITCF**	420	221
	30	M 42×2.0	29.0	50	**FM30SCF**	420	**FM30SVITCF**	420	248
	38	M 52×2.0	32.5	60	**FM38SCF**	420	**FM38SVITCF**	420	367

$\frac{\text{PN (bar)}}{10}$ = PN (MPa)

KOVA-CN

FM EO2-Functional nut

for stainless steel tubes

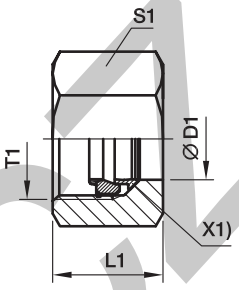

X1) Retaining ring

Series	D1	T1	L1	S1	Order code FM…71 Stainless Steel Sealing FKM	PN (bar)	FM…NBR71 Stainless Steel Sealing NBR	PN (bar)	FM…SSA Steel + Sealing Retaining ring: Stainless Steel Sealing NBR	PN (bar)	FM…VITSSA Steel + Sealing Retaining ring: Stainless Steel Sealing FKM	PN (bar)	Weight g/1 piece
LL	04	M 08×1.0	11.0	10	—	—	—	—	**FM04LLSSA**	100	—	—	5
	06	M 10×1.0	11.5	12	—	—	—	—	**FM06LLSSA**	100	—	—	6
L	06	M 12×1.5	14.5	14	**FM06L71**	315	**FM06LNBR71**	315	**FM06LSSA**	315	**FM06LVITSSA**	315	12
	08	M 14×1.5	14.5	17	**FM08L71**	315	**FM08LNBR71**	315	**FM08LSSA**	315	**FM08LVITSSA**	315	17
	10	M 16×1.5	15.5	19	**FM10L71**	315	**FM10LNBR71**	315	**FM10LSSA**	315	**FM10LVITSSA**	315	22
	12	M 18×1.5	15.5	22	**FM12L71**	315	**FM12LNBR71**	315	**FM12LSSA**	315	**FM12LVITSSA**	315	30
	15	M 22×1.5	17.0	27	**FM15L71**	315	**FM15LNBR71**	315	**FM15LSSA**	315	**FM15LVITSSA**	315	48
	18	M 26×1.5	18.0	32	**FM18L71**	315	**FM18LNBR71**	315	**FM18LSSA**	315	**FM18LVITSSA**	315	70
	22	M 30×2.0	20.0	36	**FM22L71**	160	**FM22LNBR71**	160	**FM22LSSA**	160	**FM22LVITSSA**	160	94
	28	M 36×2.0	21.0	41	**FM28L71**	160	**FM28LNBR71**	160	**FM28LSSA**	160	**FM28LVITSSA**	160	106
	35	M 45×2.0	24.0	50	**FM35L71**	160	**FM35LNBR71**	160	**FM35LSSA**	160	**FM35LVITSSA**	160	160
	42	M 52×2.0	24.0	60	**FM42L71**	160	**FM42LNBR71**	160	**FM42LSSA**	160	**FM42LVITSSA**	160	244
S	06	M 14×1.5	16.5	17	**FM06S71**	630	**FM06SNBR71**	630	**FM06SSSA**	630	**FM06SVITSSA**	630	20
	08	M 16×1.5	16.5	19	**FM08S71**	630	**FM08SNBR71**	630	**FM08SSSA**	630	**FM08SVITSSA**	630	23
	10	M 18×1.5	17.5	22	**FM10S71**	630	**FM10SNBR71**	630	**FM10SSSA**	630	**FM10SVITSSA**	630	37
	12	M 20×1.5	17.5	24	**FM12S71**	630	**FM12SNBR71**	630	**FM12SSSA**	630	**FM12SVITSSA**	630	39
	16	M 24×1.5	20.5	30	**FM16S71**	400	**FM16SNBR71**	400	**FM16SSSA**	400	**FM16SVITSSA**	400	72
	20	M 30×2.0	24.0	36	**FM20S71**	400	**FM20SNBR71**	400	**FM20SSSA**	400	**FM20SVITSSA**	400	121
	25	M 36×2.0	27.0	46	**FM25S71**	400	**FM25SNBR71**	400	**FM25SSSA**	400	**FM25SVITSSA**	400	221
	30	M 42×2.0	29.0	50	**FM30S71**	400	**FM30SNBR71**	400	**FM30SSSA**	400	**FM30SVITSSA**	400	248
	38	M 52×2.0	32.5	60	**FM38S71**	315	**FM38SNBR71**	315	**FM38SSSA**	315	**FM38SVITSSA**	315	367

$\frac{\text{PN (bar)}}{10}$ = PN (MPa)

KOMO

EO2-FORM Set

for steel tubes

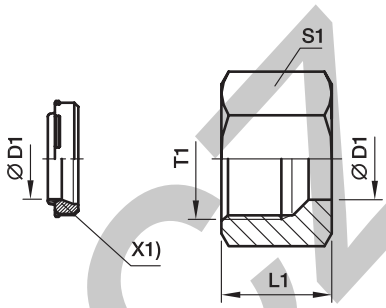

X1) Sealing (DOZ)

Series	D1	T1	L1	S1	Order code FORM…CF Steel + Sealing NBR	Order code FORM…VITCF Steel + Sealing FKM	PN (bar)	Weight g/1 piece
L	06	M 12×1.5	14.5	14	**FORM06LCF**	**FORM06LVITCF**	500	11
	08	M 14×1.5	14.5	17	**FORM08LCF**	**FORM08LVITCF**	500	16
	10	M 16×1.5	15.5	19	**FORM10LCF**	**FORM10LVITCF**	500	20
	12	M 18×1.5	15.5	22	**FORM12LCF**	**FORM12LVITCF**	400	27
	15	M 22×1.5	17.0	27	**FORM15LCF**	**FORM15LVITCF**	400	45
	18	M 26×1.5	18.0	32	**FORM18LCF**	**FORM18LVITCF**	400	67
	22	M 30×2.0	20.0	36	**FORM22LCF**	**FORM22LVITCF**	250	88
	28	M 36×2.0	21.0	41	**FORM28LCF**	**FORM28LVITCF**	250	99
	35	M 45×2.0	24.0	50	**FORM35LCF**	**FORM35LVITCF**	250	162
	42	M 52×2.0	24.0	60	**FORM42LCF**	**FORM42LVITCF**	250	233
S	06	M 14×1.5	16.5	17	**FORM06SCF**	**FORM06SVITCF**	800	19
	08	M 16×1.5	16.5	19	**FORM08SCF**	**FORM08SVITCF**	800	22
	10	M 18×1.5	17.5	22	**FORM10SCF**	**FORM10SVITCF**	800	34
	12	M 20×1.5	17.5	24	**FORM12SCF**	**FORM12SVITCF**	630	38
	16	M 24×1.5	20.5	30	**FORM16SCF**	**FORM16SVITCF**	630	71
	20	M 30×2.0	24.0	36	**FORM20SCF**	**FORM20SVITCF**	420	115
	25	M 36×2.0	27.0	46	**FORM25SCF**	**FORM25SVITCF**	420	216
	30	M 42×2.0	29.0	50	**FORM30SCF**	**FORM30SVITCF**	420	242
	38	M 52×2.0	32.5	60	**FORM38SCF**	**FORM38SVITCF**	420	366

KOVAL

EO2-FORM Set

for stainless steel tubes

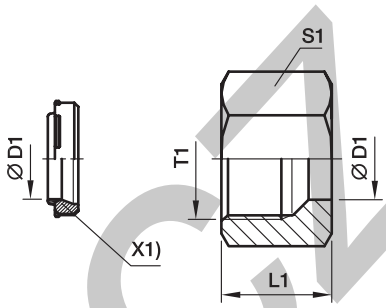

X1) Sealing (DOZ)

Series	D1	T1	L1	S1	Order code FORM…71 Stainless Steel + Sealing FKM	FORM…NBR71 Stainless Steel + Sealing NBR	FORM…CF Steel + Sealing NBR	FORM…VITCF Steel + Sealing FKM	PN (bar)	Weight g/1 piece
L	06	M 12×1.5	14.5	14	**FORM06L71**	**FORM06LNBR71**	**FORM06LCF**	**FORM06LVITCF**	315	11
	08	M 14×1.5	14.5	17	**FORM08L71**	**FORM08LNBR71**	**FORM08LCF**	**FORM08LVITCF**	315	16
	10	M 16×1.5	15.5	19	**FORM10L71**	**FORM10LNBR71**	**FORM10LCF**	**FORM10LVITCF**	315	21
	12	M 18×1.5	15.5	22	**FORM12L71**	**FORM12LNBR71**	**FORM12LCF**	**FORM12LVITCF**	315	27
	15	M 22×1.5	17.0	27	**FORM15L71**	**FORM15LNBR71**	**FORM15LCF**	**FORM15LVITCF**	315	46
	18	M 26×1.5	18.0	32	**FORM18L71**	**FORM18LNBR71**	**FORM18LCF**	**FORM18LVITCF**	315	68
	22	M 30×2.0	20.0	36	**FORM22L71**	**FORM22LNBR71**	**FORM22LCF**	**FORM22LVITCF**	160	89
	28	M 36×2.0	21.0	41	**FORM28L71**	**FORM28LNBR71**	**FORM28LCF**	**FORM28LVITCF**	160	101
	35	M 45×2.0	24.0	50	**FORM35L71**	**FORM35LNBR71**	**FORM35LCF**	**FORM35LVITCF**	160	165
	42	M 52×2.0	24.0	60	**FORM42L71**	**FORM42LNBR71**	**FORM42LCF**	**FORM42LVITCF**	160	237
S	06	M 14×1.5	16.5	17	**FORM06S71**	**FORM06SNBR71**	**FORM06SCF**	**FORM06SVITCF**	630	19
	08	M 16×1.5	16.5	19	**FORM08S71**	**FORM08SNBR71**	**FORM08SCF**	**FORM08SVITCF**	630	22
	10	M 18×1.5	17.5	22	**FORM10S71**	**FORM10SNBR71**	**FORM10SCF**	**FORM10SVITCF**	630	35
	12	M 20×1.5	17.5	24	**FORM12S71**	**FORM12SNBR71**	**FORM12SCF**	**FORM12SVITCF**	630	39
	16	M 24×1.5	20.5	30	**FORM16S71**	**FORM16SNBR71**	**FORM16SCF**	**FORM16SVITCF**	400	71
	20	M 30×2.0	24.0	36	**FORM20S71**	**FORM20SNBR71**	**FORM20SCF**	**FORM20SVITCF**	400	117
	25	M 36×2.0	27.0	46	**FORM25S71**	**FORM25SNBR71**	**FORM25SCF**	**FORM25SVITCF**	400	219
	30	M 42×2.0	29.0	50	**FORM30S71**	**FORM30SNBR71**	**FORM30SCF**	**FORM30SVITCF**	400	246
	38	M 52×2.0	32.5	60	**FORM38S71**	**FORM38SNBR71**	**FORM38SCF**	**FORM38SVITCF**	315	372

KOVIL.CZ

M Nut · EO 24° Cone end

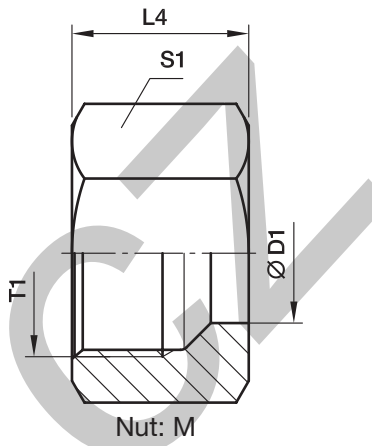

Series	D1	T1	L4	S1	Weight g/1 piece	Order code*	PN (bar)[1] CF	71	MS
LL[2])	04	M 08×1.0	11.0	10	4	**M04LL**	100	100	63
	06	M 10×1.0	11.5	12	6	**M06LL**	100	100	63
	08	M 12×1.0	12.0	14	7	**M08LL**	100	100	63
	10	M 14×1.0	12.5	17	11	**M10LL**	100	100	63
	12	M 16×1.0	13.0	19	13	**M12LL**	100	100	63
L[3])	06	M 12×1.5	14.5	14	10	**M06L**	500	315	200
	08	M 14×1.5	14.5	17	15	**M08L**	500	315	200
	10	M 16×1.5	15.5	19	18	**M10L**	500	315	200
	12	M 18×1.5	15.5	22	25	**M12L**	400	315	200
	15	M 22×1.5	17.0	27	42	**M15L**	400	315	200
	18	M 26×1.5	18.0	32	62	**M18L**	400	315	200
	22	M 30×2.0	20.0	36	82	**M22L**	250	160	100
	28	M 36×2.0	21.0	41	89	**M28L**	250	160	100
	35	M 45×2.0	24.0	50	137	**M35L**	250	160	100
	42	M 52×2.0	24.0	60	216	**M42L**	250	160	100
S[4])	06	M 14×1.5	16.5	17	17	**M06S**	800	630	400
	08	M 16×1.5	16.5	19	20	**M08S**	800	630	400
	10	M 18×1.5	17.5	22	31	**M10S**	800	630	400
	12	M 20×1.5	17.5	24	34	**M12S**	630	630	400
	16	M 24×1.5	20.5	30	66	**M16S**	630	400	250
	20	M 30×2.0	24.0	36	102	**M20S**	420	400	250
	25	M 36×2.0	27.0	46	202	**M25S**	420	400	250
	30	M 42×2.0	29.0	50	219	**M30S**	420	400	250
	38	M 52×2.0	32.5	60	339	**M38S**	420	315	200

[1]) Pressure shown = item deliverable

[2]) LL = very light series; [3]) L = light series; [4]) S = heavy series

$\frac{\text{PN (bar)}}{10}$ = PN (MPa)

*Please add the **suffixes** below according to the material/ surface required.

Order code suffixes		
Material	Suffix surface and material	Example
Steel	CFX	M16SCFX
Stainless Steel	EODURX	M16SEODURX
Brass	MSX	M16SMSX

KOVAL.CZ

D Cutting ring · PSR Progressive stop ring

for EO 24° cone end

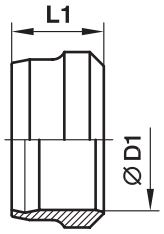

Cutting ring:
D

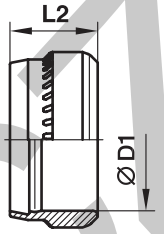

Progressive stop ring:
PSR

Series	D1	L1	Cutting ring D Order code: Steel	PN (bar)	Stainless Steel	PN (bar)	Brass	PN (bar)	Progressive stop ring PSR Order code: L2	Steel	PN (bar)	Weight g/1 pc.
LL	04	6.0	**D04LLX**	100	**D04LL71X**	100	**D04LLMSX**	63	–	**–**	–	0.3
	06	7.0	**D06LLX**	100	**D06LL71X**	100	**D06LLMSX**	63	–	**–**	–	0.8
	08	7.0	**D08LLX**	100	**D08LL71X**	100	**D08LLMSX**	63	–	**–**	–	1.0
	10	7.0	**D10LLX**	100	**D10LL71X**	100	**D10LLMSX**	63	–	**–**	–	1.3
	12	7.5	**D12LLX**	100	**D12LL71X**	100	**D12LLMSX**	63	–	**–**	–	1.6
L	06	9.5	**–**	–	**–**	–	**D06LMSX**	200	9.5	**PSR06LX**	500	1.7
	08	9.0	**–**	–	**–**	–	**D08LMSX**	200	9.5	**PSR08LX**	500	2.2
	10	10.0	**–**	–	**–**	–	**D10LMSX**	200	10.0	**PSR10LX**	500	3.1
	12	10.0	**–**	–	**–**	–	**D12LMSX**	200	10.0	**PSR12LX**	400	3.5
	15	10.0	**–**	–	**–**	–	**D15LMSX**	200	10.0	**PSR15LX**	400	4.5
	18	10.0	**–**	–	**–**	–	**D18LMSX**	200	10.0	**PSR18LX**	400	5.5
	22	10.5	**–**	–	**–**	–	**D22LMSX**	100	10.5	**PSR22LX**	250	7.3
	28	10.5	**–**	–	**–**	–	**D28LMSX**	100	10.5	**PSR28LX**	250	9.4
	35	13.0	**–**	–	**–**	–	**D35LMSX**	100	13.0	**PSR35LX**	250	20.0
	42	13.5	**–**	–	**–**	–	**D42LMSX**	100	13.0	**PSR42LX**	250	23.0
S	06	9.5	**–**	–	**–**	–	**D06LMSX**	400	9.5	**PSR06LX**	800	1.7
	08	9.0	**–**	–	**–**	–	**D08LMSX**	400	9.5	**PSR08LX**	800	3.2
	10	10.0	**–**	–	**–**	–	**D10LMSX**	400	10.0	**PSR10LX**	800	3.1
	12	10.0	**–**	–	**–**	–	**D12LMSX**	400	10.0	**PSR12LX**	630	3.5
	16	10.5	**–**	–	**–**	–	**D16SMSX**	250	10.0	**PSR16SX**	630	5.6
	20	12.5	**–**	–	**–**	–	**D20SMSX**	250	13.0	**PSR20SX**	420	11.4
	25	12.5	**–**	–	**–**	–	**D25SMSX**	250	13.0	**PSR25SX**	420	13.3
	30	13.0	**–**	–	**–**	–	**D30SMSX**	250	13.0	**PSR30SX**	420	19.3
	38	13.5	–	–	**–**	–	**D38SMSX**	200	13.0	**PSR38SX**	420	22.5

$\frac{\text{PN (bar)}}{10}$ = PN (MPa)

KOVAZ

DPR Progressive ring

for EO 24° cone end

Progressive ring: DPR

Series	D1	L3	Progressive ring DPR Order code Stainless Steel	Stainless Steel SPH	PN (bar)	Weight g/1 piece
L	06	9.0	**DPR06L71X**	**DPR06LSPH71X**	315	1.7
	08	9.0	**DPR08L71X**	**DPR08LSPH71X**	315	2.2
	10	9.5	**DPR10L71X**	**DPR10LSPH71X**	315	3.1
	12	9.8	**DPR12L71X**	**DPR12LSPH71X**	315	3.5
	15	9.5	**DPR15L71X**	**DPR15LSPH71X**	315	4.5
	18	9.5	**DPR18L71X**	**DPR18LSPH71X**	315	5.5
	22	10.5	**DPR22L71X**	**DPR22LSPH71X**	160	7.3
	28	11.0	**DPR28L71X**	**DPR28LSPH71X**	160	9.4
	35	13.5	**DPR35L71X**	**DPR35LSPH71X**	160	20.0
	42	13.5	**DPR42L71X**	**DPR42LSPH71X**	160	23.0
S	06	9.0	**DPR06L71X**	**DPR06LSPH71X**	630	1.7
	08	9.0	**DPR08L71X**	**DPR08LSPH71X**	630	3.2
	10	9.5	**DPR10L71X**	**DPR10LSPH71X**	630	3.1
	12	9.8	**DPR12L71X**	**DPR12LSPH71X**	630	3.5
	16	9.5	**DPR16S71X**	**DPR16SSPH71X**	400	5.6
	20	12.5	**DPR20S71X**	**DPR20SSPH71X**	400	11.4
	25	12.5	**DPR25S71X**	**DPR25SSPH71X**	400	13.3
	30	12.5	**DPR30S71X**	**DPR30SSPH71X**	400	19.3
	38	13.0	**DPR38S71X**	**DPR38SSPH71X**	315	22.5

$\frac{\text{PN (bar)}}{10} = \text{PN (MPa)}$

KOVAZ.CZ

S Sleeve screw

for threaded ports according to DIN 3854

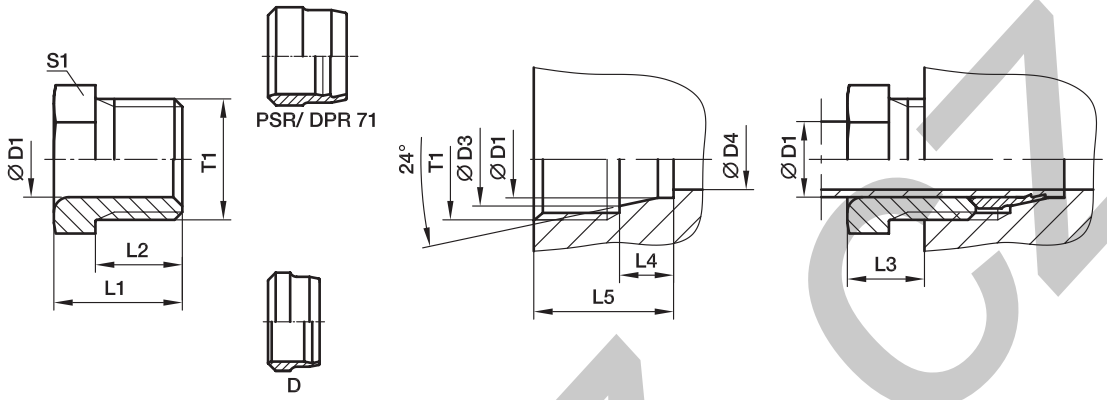

Series	D1	T1	D3	D4	L1	L2	L3	L4	L5	S1	Weight g/1 piece	Order code*	PN (bar)[1] Steel	PN (bar)[1] 71
LL[2])	04	M 08×1.0	5.0	3.0	12	8.0	6	4.0	12.5	8	3	**S04LL**	100	100
	06	M 10×1.0	7.5	4.5	13	9.0	7	5.5	14.5	10	4	**S06LL**	100	100
	08	M 12×1.0	9.5	6.0	14	9.5	7	5.5	14.5	12	6	**S08LL**	100	100
L[3])	06	M 12×1.5	8.1	4.0	16	11.5	10	7.0	18.5	12	9	**S06L**	315	315
	08	M 14×1.5	10.1	6.0	16	11.5	10	7.0	18.5	14	11	**S08L**	315	315
	10	M 16×1.5	12.3	8.0	17	11.5	10	7.0	18.5	17	15	**S10L**	315	315
	12	M 18×1.5	14.3	10.0	18	12.0	10	7.0	19.0	19	19	**S12L**	315	315

[1]) Pressure shown = item deliverable

[2]) LL = very light series; [3]) L = light series

$\frac{\text{PN (bar)}}{10}$ = PN (MPa)

*Please add the **suffixes** below according to the material/ surface required.

Order code suffixes		
Material	Suffix surface and material	Example
Steel	CFX	S10LCFX
Stainless Steel	71X	S10L71X

KOVAL.CZ

G Union

EO 24°cone end

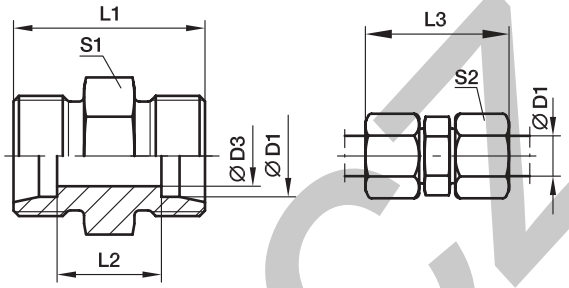

Series	D1	D3	L1	L2	L3	S1	S2	Weight g/1 piece	Order code*	PN (bar)[1] Steel	71	MS
LL[2])	04	3.0	20	12	31	9	10	5	**G04LL**	100	100	63
	06	4.5	20	9	32	11	12	7	**G06LL**	100	100	63
	08	6.0	23	12	35	12	14	10	**G08LL**	100	100	63
	10	8.0	23	12	35	14	17	13	**G10LL**	100	100	63
	12	10.0	23	11	35	17	19	16	**G12LL**	100	100	63
L[3])	06	4.0	24	10	39	12	14	12	**G06L**	500	315	200
	08	6.0	25	11	40	14	17	16	**G08L**	500	315	200
	10	8.0	27	13	42	17	19	23	**G10L**	500	315	200
	12	10.0	28	14	43	19	22	28	**G12L**	400	315	200
	15	12.0	30	16	46	24	27	51	**G15L**	400	315	200
	18	15.0	31	16	48	27	32	69	**G18L**	400	315	200
	22	19.0	35	20	52	32	36	90	**G22L**	250	160	100
	28	24.0	36	21	54	41	41	137	**G28L**	250	160	100
	35	30.0	41	20	63	46	50	214	**G35L**	250	160	100
	42	36.0	43	21	66	55	60	296	**G42L**	250	160	100
S[4])	06	4.0	30	16	45	14	17	26	**G06S**	800	630	400
	08	5.0	32	18	47	17	19	37	**G08S**	800	630	400
	10	7.0	32	17	49	19	22	44	**G10S**	800	630	400
	12	8.0	34	19	51	22	24	60	**G12S**	630	630	400
	16	12.0	38	21	57	27	30	90	**G16S**	630	400	250
	20	16.0	44	23	66	32	36	143	**G20S**	420	400	250
	25	20.0	50	26	74	41	46	251	**G25S**	420	400	250
	30	25.0	54	27	80	46	50	330	**G30S**	420	400	250
	38	32.0	61	29	90	55	60	545	**G38S**	420	315	200

[1]) Pressure shown = item deliverable

[2]) LL = very light series; [3]) L = light series; [4]) S = heavy series

$\frac{\text{PN (bar)}}{10}$ = PN (MPa)

Delivery without nut and ring. Information on ordering complete fittings see page I7.

*Please add the **suffixes** below according to the material/ surface required.

Order code suffixes		
Material	Suffix surface and material	Example
Steel	CFX	G16SCFX
Stainless Steel	71X	G16S71X
Brass	MSX	G16SMSX

KOVA.cz

GR Straight reducer

EO 24° cone end

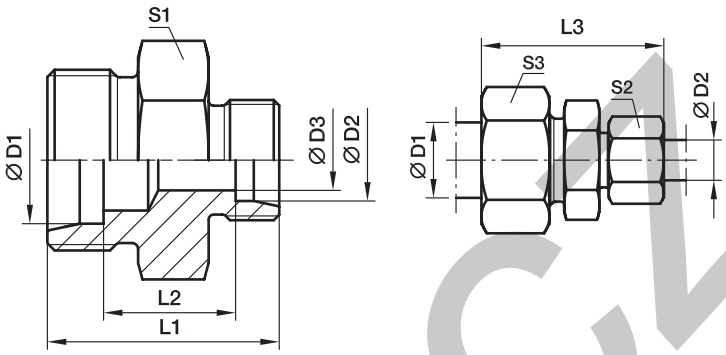

Series	D1	D2	D3	L1	L2	L3	S1	S2	S3	Weight g/1 piece	Order code*	PN (bar)[1] Steel	71	MS
LL[2])	06	04	3.0	20	10.5	32	11	10	12	7	**GR06/04LL**	100	100	63
	08	04	3.0	22	12.5	34	12	10	14	9	**GR08/04LL**	100	100	63
	08	06	4.5	22	11.0	34	12	12	14	11	**GR08/06LL**	100	100	63
L[3])	08	06	4.0	25	11.0	40	14	14	17	16	**GR08/06L**	500	315	200
	10	06	4.0	26	12.0	41	17	14	19	21	**GR10/06L**	500	315	200
	10	08	6.0	26	12.0	41	17	17	19	21	**GR10/08L**	500	315	200
	12	06	4.0	27	13.0	42	19	14	22	26	**GR12/06L**	400	315	200
	12	08	6.0	27	13.0	42	19	17	22	26	**GR12/08L**	400	315	200
	12	10	8.0	28	14.0	43	19	19	22	29	**GR12/10L**	400	315	200
	15	10	8.0	29	15.0	45	24	19	27	46	**GR15/10L**	400	315	200
	15	12	10.0	29	15.0	45	24	22	27	45	**GR15/12L**	400	315	200
	18	10	8.0	30	15.5	46	27	19	32	65	**GR18/10L**	400	315	200
	18	12	10.0	30	15.5	46	27	22	32	64	**GR18/12L**	400	315	200
	18	15	12.0	31	16.5	48	27	27	32	65	**GR18/15L**	400	315	200
	22	12	10.0	32	17.5	48	32	22	36	80	**GR22/12L**	250	160	100
	22	15	12.0	33	18.5	50	32	27	36	89	**GR22/15L**	250	160	100
	22	18	15.0	33	18.0	50	32	32	36	89	**GR22/18L**	250	160	100
	28	18	15.0	34	19.0	52	41	32	41	142	**GR28/18L**	250	160	100
	28	22	19.0	36	21.0	54	41	36	41	139	**GR28/22L**	250	160	100
	35	22	19.0	39	21.0	59	46	36	50	202	**GR35/22L**	250	160	100
	35	28	24.0	39	21.0	59	46	41	50	206	**GR35/28L**	250	160	100
	42	35	30.0	43	21.5	66	55	50	60	330	**GR42/35L**	250	160	100
S[4])	08	06	4.0	32	18.0	47	17	17	19	35	**GR08/06S**	800	630	400
	10	06	4.0	32	17.5	48	19	17	22	41	**GR10/06S**	800	630	400
	10	08	5.0	32	17.5	48	19	19	22	42	**GR10/08S**	800	630	400
	12	06	4.0	34	19.5	50	22	17	24	56	**GR12/06S**	630	630	400
	12	08	5.0	34	19.5	50	22	19	24	57	**GR12/08S**	630	630	400
	12	10	7.0	34	19.0	51	22	22	24	59	**GR12/10S**	630	630	400
	16	10	7.0	36	20.0	54	27	22	30	80	**GR16/10S**	630	400	250
	16	12	8.0	36	20.0	54	27	24	30	87	**GR16/12S**	630	400	250
	16	14	10.0	36	21.5	57	27	27	30	79	**GR16/14S**	630	400	250
	20	10	7.0	40	22.0	60	32	22	36	129	**GR20/10S**	420	400	250
	20	12	8.0	40	22.0	60	32	24	36	131	**GR20/12S**	420	400	250
	20	16	12.0	42	23.0	63	32	30	36	134	**GR20/16S**	420	400	250
	25	16	12.0	46	25.5	68	41	30	46	236	**GR25/16S**	420	400	250
	25	20	16.0	48	25.5	71	41	36	46	235	**GR25/20S**	420	400	250
	30	20	16.0	50	26.0	74	46	36	50	299	**GR30/20S**	420	400	250
	30	25	20.0	52	26.5	77	46	46	50	317	**GR30/25S**	420	400	250
	38	30	25.0	59	29.5	87	55	50	60	522	**GR38/30S**	420	315	200

[1]) Pressure shown = item deliverable

[2]) LL = very light series; [3]) L = light series; [4]) S = heavy series

$\frac{\text{PN (bar)}}{10}$ = PN (MPa)

Delivery without nut and ring. Information on ordering complete fittings see page I7.

*Please add the **suffixes** below according to the material/surface required.

Order code suffixes		
Material	Suffix surface and material	Example
Steel	CFX	GR16/12SCFX
Stainless Steel	71X	GR16/12S71X
Brass	MSX	GR16/12SMSX

KOVAZ.cz

W Union elbow

EO 24° cone end

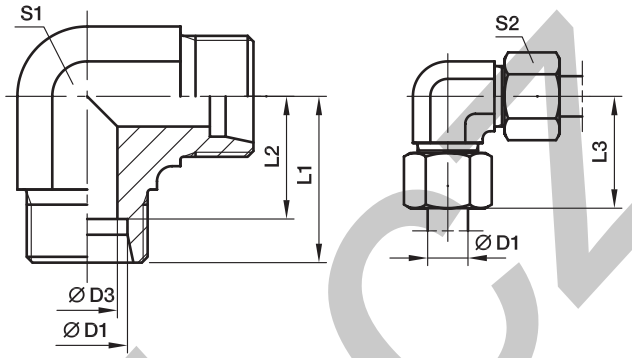

Series	D1	D3	L1	L2	L3	S1	S2	Weight g/1 piece	Order code*	PN (bar)[1] Steel	71	MS
LL[2])	04	3.0	15	11.0	21	9	10	13	**W04LL**	100	100	63
	06	4.5	15	9.5	21	9	12	15	**W06LL**	100	100	63
	08	6.0	17	11.5	23	12	14	23	**W08LL**	100	100	63
	10	8.0	18	12.5	24	12	17	32	**W10LL**	100	100	63
	12	10.0	19	13.0	25	14	19	41	**W12LL**	100	100	63
L[3])	06	4.0	19	12.0	27	12	14	29	**W06L**	500	315	200
	08	6.0	21	14.0	29	12	17	43	**W08L**	500	315	200
	10	8.0	22	15.0	30	14	19	54	**W10L**	500	315	200
	12	10.0	24	17.0	32	19	22	80	**W12L**	400	315	200
	15	12.0	28	21.0	36	19	27	81	**W15L**	400	315	200
	18	15.0	31	23.5	40	24	32	140	**W18L**	400	315	200
	22	19.0	35	27.5	44	27	36	178	**W22L**	250	160	100
	28	24.0	38	30.5	47	36	41	340	**W28L**	250	160	100
	35	30.0	45	34.5	56	41	50	458	**W35L**	250	160	100
	42	36.0	51	40.0	63	50	60	776	**W42L**	250	160	100
S[4])	06	4.0	23	16.0	31	12	17	52	**W06S**	800	630	400
	08	5.0	24	17.0	32	14	19	74	**W08S**	800	630	400
	10	7.0	25	17.5	34	19*	22	97	**W10S**	800	630	400
	12	8.0	29	21.5	38	19*	24	137	**W12S**	630	630	400
	16	12.0	33	24.5	43	24	30	162	**W16S**	630	400	250
	20	16.0	37	26.5	48	27	36	221	**W20S**	420	400	250
	25	20.0	42	30.0	54	36	46	424	**W25S**	420	400	250
	30	25.0	49	35.5	62	41	50	603	**W30S**	420	400	250
	38	32.0	57	41.0	72	50	60	1010	**W38S**	420	315	200

[1]) Pressure shown = item deliverable

[2]) LL = very light series; [3]) L = light series; [4]) S = heavy series

*S1 = 17 in 1.4571

$\frac{\text{PN (bar)}}{10}$ = PN (MPa)

Delivery without nut and ring. Information on ordering complete fittings see page I7.

*Please add the **suffixes** below according to the material/surface required.

Order code suffixes		
Material	Suffix surface and material	Example
Steel	CFX	W16SCFX
Stainless Steel	71X	W16S71X
Brass	MSX	W16SMSX

KOVALCZ

T Union tee

EO 24° cone end

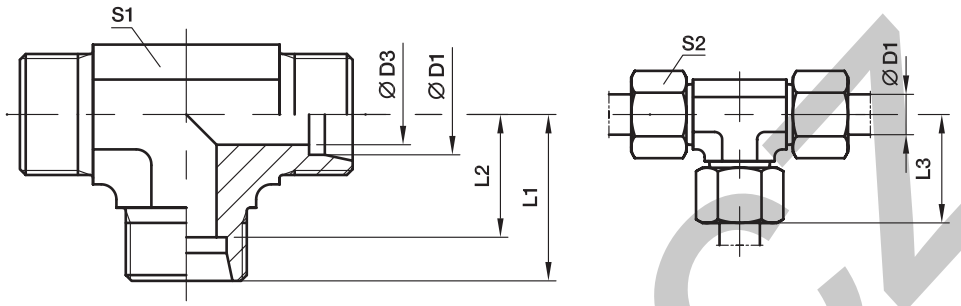

Series	D1	D3	L1	L2	L3	S1	S2	Weight g/1 piece	Order code*	PN (bar)[1] Steel	71	MS
LL[2])	04	3.0	15	11.0	21	9	10	19	**T04LL**	100	100	63
	06	4.5	15	9.5	21	9	12	20	**T06LL**	100	100	63
	08	6.0	17	11.5	23	12	14	27	**T08LL**	100	100	63
	10	8.0	18	12.5	24	12	17	39	**T10LL**	100	100	63
	12	10.0	21	15.0	27	14	19	45	**T12LL**	100	100	63
L[3])	06	4.0	19	12.0	27	12	14	37	**T06L**	500	315	200
	08	6.0	21	14.0	29	12	17	53	**T08L**	500	315	200
	10	8.0	22	15.0	30	14	19	48	**T10L**	500	315	200
	12	10.0	24	17.0	32	17	22	65	**T12L**	400	315	200
	15	12.0	28	21.0	36	19	27	106	**T15L**	400	315	200
	18	15.0	31	23.5	40	24	32	179	**T18L**	400	315	200
	22	19.0	35	27.5	44	27	36	225	**T22L**	250	160	100
	28	24.0	38	30.5	47	36	41	396	**T28L**	250	160	100
	35	30.0	45	34.5	56	41	50	567	**T35L**	250	160	100
	42	36.0	51	40.0	63	50	60	905	**T42L**	250	160	100
S[4])	06	4.0	23	16.0	31	12	17	68	**T06S**	800	630	400
	08	5.0	24	17.0	32	14	19	70	**T08S**	800	630	400
	10	7.0	25	17.5	34	17	22	91	**T10S**	800	630	400
	12	8.0	29	21.5	38	19*	24	117	**T12S**	630	630	400
	16	12.0	33	24.5	43	24	30	202	**T16S**	630	400	250
	20	16.0	37	26.5	48	27	36	289	**T20S**	420	400	250
	25	20.0	42	30.0	54	36	46	545	**T25S**	420	400	250
	30	25.0	49	35.5	62	41	50	758	**T30S**	420	400	250
	38	32.0	57	41.0	72	50	60	1264	**T38S**	420	315	200

1) Pressure shown = item deliverable

2) LL = very light series; 3) L = light series; 4) S = heavy series

*S1 = 17 in 1.4571

$\frac{\text{PN (bar)}}{10}$ = PN (MPa)

Delivery without nut and ring. Information on ordering complete fittings see page I7.

Order code suffixes		
Material	Suffix surface and material	Example
Steel	CFX	T16SCFX
Stainless Steel	71X	T16S71X
Brass	MSX	T16SMSX

*Please add the **suffixes** below according to the material/surface required.

KOVALCZ

TR Tee Reducer

EO 24° cone end

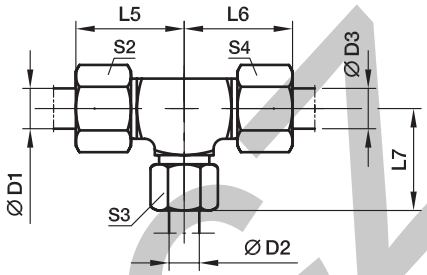

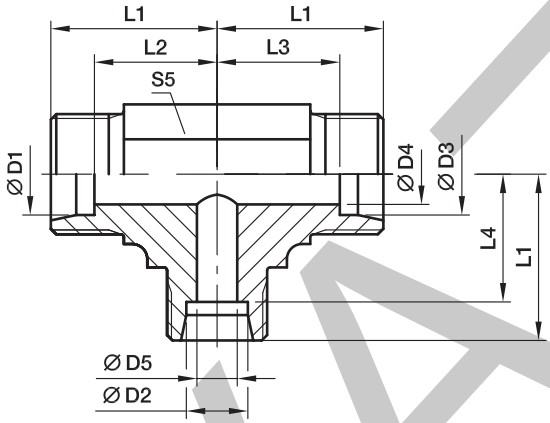

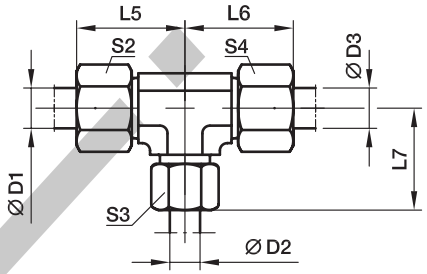

Series	D1	D2	D3	D4	D5	L1	L2	L3	L4	L5	L6	L7	S2	S3	S4	S5	Weight g/1 piece	Order code*	PN (bar)[1] Steel	71	MS
LL[2]	04	08	04	3.0	6	17	13.0	13.0	11.5	23	23	23	10	14	10	12	27	**TR04/08/04LL**	100	100	63
	06	04	06	4.5	3	15	9.5	9.5	11.0	21	21	21	12	10	12	9	18	**TR06/04/06LL**	100	100	63
L[3]	06	08	06	4.0	6	21	14.0	14.0	14.0	29	29	29	14	17	14	12	54	**TR06/08/06L**	500	315	200
	08	06	08	6.0	4	21	14.0	14.0	14.0	29	29	29	17	14	17	12	53	**TR08/06/08L**	500	315	200
	06	10	06	4.0	8	22	15.0	15.0	15.0	30	30	30	14	19	14	14	53	**TR06/10/06L**	500	315	200
	08	10	08	6.0	8	22	15.0	15.0	15.0	30	30	30	17	19	17	14	50	**TR08/10/08L**	500	315	200
	10	06	10	8.0	4	22	15.0	15.0	15.0	30	30	30	19	14	19	14	46	**TR10/06/10L**	500	315	200
	10	08	10	8.0	6	22	15.0	15.0	15.0	30	30	30	19	17	19	14	43	**TR10/08/10L**	500	315	200
	10	10	06	4.0	8	22	15.0	15.0	15.0	30	30	30	19	19	14	14	49	**TR10/10/06L**	500	315	200
	08	12	08	6.0	10	24	17.0	17.0	17.0	32	32	32	17	22	17	17	67	**TR08/12/08L**	400	315	200
	12	06	12	10.0	4	24	17.0	17.0	17.0	32	32	32	22	14	22	17	66	**TR12/06/12L**	400	315	200
	12	08	08	6.0	6	24	17.0	17.0	17.0	32	32	32	22	17	17	17	66	**TR12/08/08L**	400	315	200
	12	08	12	10.0	6	24	17.0	17.0	17.0	32	32	32	22	17	22	17	68	**TR12/08/12L**	400	315	200
	12	10	10	8.0	8	24	17.0	17.0	17.0	32	32	32	22	19	19	17	67	**TR12/10/10L**	400	315	200
	12	10	12	10.0	8	24	17.0	17.0	17.0	32	32	32	22	19	22	17	67	**TR12/10/12L**	400	315	200
	12	12	10	8.0	10	24	17.0	17.0	17.0	32	32	32	22	22	19	17	64	**TR12/12/10L**	400	315	200
	10	15	10	8.0	12	28	21.0	21.0	21.0	36	36	36	19	27	19	19	105	**TR10/15/10L**	400	315	200
	12	15	12	10.0	12	28	21.0	21.0	21.0	36	36	36	22	27	22	19	102	**TR12/15/12L**	400	315	200
	15	06	15	12.0	4	28	21.0	21.0	21.0	36	36	36	27	14	27	19	107	**TR15/06/15L**	400	315	200
	15	10	15	12.0	8	28	21.0	21.0	21.0	36	36	36	27	19	27	19	105	**TR15/10/15L**	400	315	200
	15	12	12	10.0	10	28	21.0	21.0	21.0	36	36	36	27	22	22	19	101	**TR15/12/12L**	400	315	200
	15	12	15	12.0	10	28	21.0	21.0	21.0	36	36	36	27	22	27	19	105	**TR15/12/15L**	400	315	200
	15	15	12	10.0	12	28	21.0	21.0	21.0	36	36	36	27	27	22	19	103	**TR15/15/12L**	400	315	200
	12	18	12	10.0	15	31	24.0	24.0	23.5	39	39	40	22	32	22	24	177	**TR12/18/12L**	400	315	200
	18	10	10	8.0	8	31	23.5	24.0	24.0	40	39	39	32	19	19	24	173	**TR18/10/10L**	400	315	200
	18	10	18	15.0	8	31	23.5	23.5	24.0	40	40	39	32	19	32	24	182	**TR18/10/18L**	400	315	200
	18	12	18	15.0	10	31	23.5	23.5	24.0	40	40	39	32	22	32	24	174	**TR18/12/18L**	400	315	200

VOLVAZ.CZ

TR Tee Reducer

EO 24° cone end

Series	D1	D2	D3	D4	D5	L1	L2	L3	L4	L5	L6	L7	S2	S3	S4	S5	Weight g/1 piece	Order code*	PN (bar)[1] Steel	71	MS
L[3]	18	15	18	15.0	12	31	23.5	23.5	24.0	40	40	39	32	27	32	24	179	**TR18/15/18L**	400	315	200
	18	18	10	8.0	15	31	23.5	24.0	23.5	40	39	40	32	32	19	24	171	**TR18/18/10L**	400	315	200
	22	10	22	19.0	8	35	27.5	27.5	28.0	44	44	43	36	19	36	27	232	**TR22/10/22L**	250	160	100
	22	12	22	19.0	10	35	27.5	27.5	28.0	44	44	43	36	22	36	27	229	**TR22/12/22L**	250	160	100
	22	15	15	12.0	12	35	27.5	28.0	28.0	44	43	43	36	27	27	27	240	**TR22/15/15L**	250	160	100
	22	15	22	19.0	12	35	27.5	27.5	28.0	44	44	43	36	27	36	27	233	**TR22/15/22L**	250	160	100
	22	18	18	15.0	15	35	27.5	27.5	27.5	44	44	44	36	32	32	27	236	**TR22/18/18L**	250	160	100
	22	18	22	19.0	15	35	27.5	27.5	27.5	44	44	44	36	32	36	27	239	**TR22/18/22L**	250	160	100
	22	22	18	15.0	19	35	27.5	27.5	27.5	44	44	44	36	36	32	27	228	**TR22/22/18L**	250	160	100
	28	10	28	24.0	8	38	30.5	30.5	31.0	47	47	46	41	19	41	36	412	**TR28/10/28L**	250	160	100
	28	12	28	24.0	10	38	30.5	30.5	31.0	47	47	46	41	22	41	36	408	**TR28/12/28L**	250	160	100
	28	15	28	24.0	12	38	30.5	30.5	31.0	47	47	46	41	27	41	36	423	**TR28/15/28L**	250	160	100
	28	18	28	24.0	15	38	30.5	30.5	30.5	47	47	47	41	32	41	36	421	**TR28/18/28L**	250	160	100
	28	22	22	19.0	19	38	30.5	30.5	30.5	47	47	47	41	36	36	36	412	**TR28/22/22L**	250	160	100
	28	22	28	24.0	19	38	30.5	30.5	30.5	47	47	47	41	36	41	36	415	**TR28/22/28L**	250	160	100
S[4]	10	06	10	7.0	4	25	17.5	17.5	18.0	34	34	33	22	17	22	17	103	**TR10/06/10S**	800	630	400
	12	08	08	5.0	5	29	21.5	22.0	22.0	38	37	37	24	19	19	19*	107	**TR12/08/08S**	630	630	400
	12	08	12	8.0	5	29	21.5	21.5	22.0	38	38	37	24	19	24	19*	105	**TR12/08/12S**	630	630	400
	12	10	12	8.0	7	29	21.5	21.5	21.5	38	38	38	24	22	24	19*	114	**TR12/10/12S**	630	630	400
	12	16	12	8.0	12	33	25.5	25.5	24.5	42	42	43	24	30	24	24	190	**TR12/16/12S**	630	400	250
	16	06	16	12.0	4	33	24.5	24.5	26.0	43	43	41	30	17	30	24	176	**TR16/06/16S**	630	400	250
	16	08	16	12.0	5	33	24.5	24.5	26.0	43	43	41	30	19	30	24	208	**TR16/08/16S**	630	400	250
	16	10	16	12.0	7	33	24.5	24.5	25.5	43	43	42	30	22	30	24	210	**TR16/10/16S**	630	400	250
	16	12	16	12.0	8	33	24.5	24.5	25.5	43	43	42	30	24	30	24	386	**TR16/12/16S**	630	400	250
	16	20	16	12.0	16	37	28.5	28.5	26.5	47	47	48	30	36	30	27	296	**TR16/20/16S**	420	400	250
	20	10	20	16.0	7	37	26.5	26.5	29.5	48	48	46	36	22	36	27	553	**TR20/10/20S**	420	400	250
	20	12	20	16.0	8	37	26.5	26.5	29.5	48	48	46	36	24	36	27	306	**TR20/12/20S**	420	400	250
	20	16	20	16.0	12	37	26.5	26.5	28.5	48	48	47	36	30	36	27	285	**TR20/16/20S**	420	400	250
	20	25	20	16.0	20	42	31.5	31.5	30.0	53	53	54	36	46	36	36	544	**TR20/25/20S**	420	400	250
	25	16	25	20.0	12	42	30.0	30.0	33.5	54	54	52	46	30	46	36	556	**TR25/16/25S**	420	400	250
	25	20	25	20.0	16	42	30.0	30.0	31.5	54	54	53	46	36	46	36	544	**TR25/20/25S**	420	400	250
	25	30	25	20.0	25	49	37.0	37.0	35.5	61	61	62	46	50	46	41	791	**TR25/30/25S**	420	400	250

[1]) Pressure shown = item deliverable

[2]) LL = very light series; [3]) L = light series; [4]) S = heavy series

*S5 = 17 in 1.4571

$\frac{\text{PN (bar)}}{10}$ = PN (MPa)

Delivery without nut and ring. Information on ordering complete fittings see page I7.

*Please add the **suffixes** below according to the material/surface required.

Order code suffixes		
Material	Suffix surface and material	Example
Steel	CFX	TR16/12/16SCFX
Stainless Steel	71X	TR16/12/16S71X
Brass	MSX	TR16/12/16SMSX

KOVAL

K Union cross

EO 24° cone end

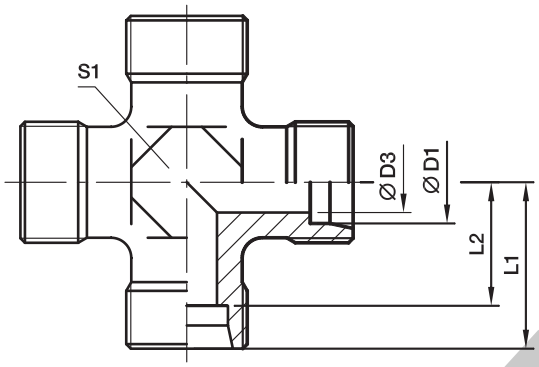

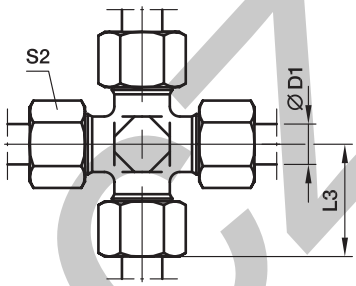

Series	D1	D3	L1	L2	L3	S1	S2	Weight g/1 piece	Order code*	PN (bar)[1] Steel	71	MS
LL[2])	04	3.0	15	11.0	21	9	10	13	**K04LL**	100	100	63
	06	4.5	15	9.5	21	9	12	14	**K06LL**	100	100	63
	08	6.0	17	11.5	23	12	14	24	**K08LL**	100	100	63
L[3])	06	4.0	19	12.0	27	12	14	35	**K06L**	315	315	200
	08	6.0	21	14.0	29	12	17	40	**K08L**	315	315	200
	10	8.0	22	15.0	30	14	19	52	**K10L**	315	315	200
	12	10.0	24	17.0	32	17	22	69	**K12L**	315	315	200
	15	12.0	28	21.0	36	19	27	130	**K15L**	315	315	200
	18	15.0	31	23.5	40	24	32	188	**K18L**	315	315	200
	22	19.0	35	27.5	44	27	36	251	**K22L**	160	160	100
	28	24.0	38	30.5	47	36	41	392	**K28L**	160	160	100
	35	30.0	45	34.5	56	41	50	618	**K35L**	160	160	100
	42	36.0	51	40.0	63	50	60	905	**K42L**	160	160	100
S[4])	06	4.0	23	16.0	31	12	17	58	**K06S**	630	630	400
	08	5.0	24	17.0	32	14	19	82	**K08S**	630	630	400
	10	7.0	25	17.5	34	17	22	97	**K10S**	630	630	400
	12	8.0	29	21.5	38	17	24	146	**K12S**	630	630	400
	16	12.0	33	24.5	43	24	30	220	**K16S**	400	400	250
	20	16.0	37	26.5	48	27	36	339	**K20S**	315	315	200
	25	20.0	42	30.0	54	36	46	576	**K25S**	315	315	200
	30	25.0	49	35.5	62	41	50	843	**K30S**	315	315	200
	38	32.0	57	41.0	72	50	60	1350	**K38S**	315	315	200

[1]) Pressure shown = item deliverable

[2]) LL = very light series; [3]) L = light series; [4]) S = heavy series

$\frac{\text{PN (bar)}}{10}$ = PN (MPa)

Delivery without nut and ring. Information on ordering complete fittings see page I7.

*Please add the **suffixes** below according to the material/surface required.

Order code suffixes		
Material	Suffix surface and material	Example
Steel	CFX	K16SCFX
Stainless Steel	71X	K16S71X
Brass	MSX	K16SMSX

KOMAC

SV Bulkhead union

EO 24° cone end

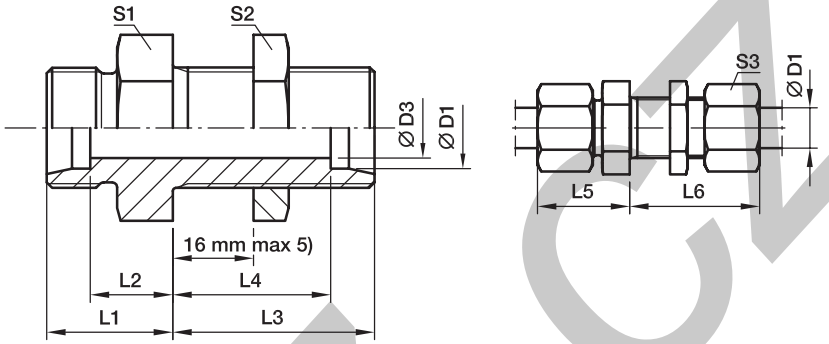

Series	D1	D3	L1	L2	L3	L4	L5	L6	S1	S2	S3	Weight g/1 piece	Order code*	PN (bar)[1] Steel	71	MS
L[3])	06	4	14	7.0	34	27.0	22	42	17	17	14	39	**SV06LOMD**	500	315	200
	08	6	15	8.0	34	27.0	23	42	19	19	17	50	**SV08LOMD**	500	315	200
	10	8	17	10.0	35	28.0	25	43	22	22	19	67	**SV10LOMD**	500	315	200
	12	10	17	10.0	36	29.0	25	44	24	24	22	78	**SV12LOMD**	400	315	200
	15	12	19	12.0	38	31.0	27	46	27	30	27	128	**SV15LOMD**	400	315	200
	18	15	21	13.5	40	32.5	30	49	32	36	32	198	**SV18LOMD**	400	315	200
	22	19	24	16.5	42	34.5	33	51	36	41	36	254	**SV22LOMD**	250	160	100
	28	24	26	18.5	43	35.5	35	52	41	46	41	335	**SV28LOMD**	250	160	100
	35	30	29	18.5	47	36.5	40	58	50	55	50	546	**SV35LOMD**	250	160	160
	42	36	30	19.0	47	36.0	42	59	60	65	60	758	**SV42LOMD**	250	160	160
S[4])	06	4	19	12.0	36	29.0	27	44	19	19	17	65	**SV06SOMD**	800	630	400
	08	5	20	13.0	36	29.0	28	44	22	22	19	87	**SV08SOMD**	800	630	400
	10	7	22	14.5	37	29.5	31	46	24	24	22	112	**SV10SOMD**	800	630	400
	12	8	22	14.5	38	30.5	31	47	27	27	24	141	**SV12SOMD**	630	630	400
	16	12	25	16.5	40	31.5	35	50	32	32	30	201	**SV16SOMD**	630	400	250
	20	16	28	17.5	44	33.5	39	55	41	41	36	462	**SV20SOMD**	420	400	250
	25	20	32	20.0	47	35.0	44	59	46	46	46	492	**SV25SOMD**	420	400	250
	30	25	35	21.5	51	37.5	48	64	50	50	50	631	**SV30SOMD**	420	400	250
	38	32	38	22.0	53	37.0	53	68	65	65	60	1083	**SV38SOMD**	420	315	

[1]) Pressure shown = item deliverable

[3]) L = light series; [4]) S = heavy series

[5]) Bulkhead thickness min.
06–18 L and 06–16 S = 3 mm
22–42 L and 20–38 S = 4 mm

$\frac{\text{PN (bar)}}{10}$ = PN (MPa)

Delivery without nut and ring. Information on ordering complete fittings see page I7.

*Please add the **suffixes** below according to the material/surface required.

Order code suffixes		
Material	Suffix surface and material	Example
Steel	CF	SV16SOMDCF
Stainless Steel	71	SV16SOMD71
Brass	MS	SV16SOMDMS

KOVAZ.CZ

WSV Bulkhead elbow

EO 24° cone end

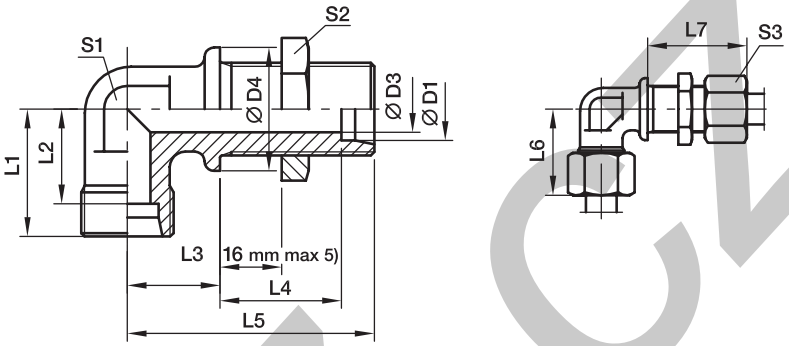

Series	D1	D3	D4	L1	L2	L3	L4	L5	L6	L7	S1	S2	S3	Weight g/1 piece	Order code*	PN (bar)[1] Steel	71	MS
L[3])	06	4	17	19	12.0	14	27.0	48	27	42	12	17	14	51	**WSV06LOMD**	315	315	200
	08	6	19	21	14.0	17	27.0	51	29	42	12	19	17	61	**WSV08LOMD**	315	315	200
	10	8	22	22	15.0	18	28.0	53	30	43	14	22	19	78	**WSV10LOMD**	315	315	200
	12	10	24	24	17.0	20	29.0	56	32	44	17	24	22	85	**WSV12LOMD**	315	315	200
	15	12	27	28	21.0	23	31.0	61	36	46	19	30	27	150	**WSV15LOMD**	315	315	200
	18	15	32	31	23.5	24	32.5	64	40	49	24	36	32	238	**WSV18LOMD**	315	315	200
	22	19	36	35	27.5	30	34.5	72	44	51	27	41	36	327	**WSV22LOMD**	160	160	
	28	24	42	38	30.5	34	35.5	77	47	52	36	46	41	482	**WSV28LOMD**	160	160	
	35	30	50	45	34.5	39	36.5	86	56	58	41	55	50	729	**WSV35LOMD**	160	160	
	42	36	60	51	40.0	43	36.0	90	63	59	50	65	60	1091	**WSV42LOMD**	160	160	
S[4])	06	4	19	23	16.0	17	29.0	53	31	44	12	19	17	72	**WSV06SOMD**	630	630	
	08	5	22	24	17.0	18	29.0	54	32	44	14	22	19	99	**WSV08SOMD**	630	630	
	10	7	24	25	17.5	20	29.5	57	34	46	17	24	22	128	**WSV10SOMD**	630	630	
	12	8	27	29	21.5	21	30.5	59	38	47	17	27	24	168	**WSV12SOMD**	630	630	
	16	12	30	33	24.5	24	31.5	64	43	50	24	32	30	249	**WSV16SOMD**	400	400	
	20	16	36	37	26.5	30	33.5	74	48	55	27	41	36	390	**WSV20SOMD**	400	400	
	25	20	42	42	30.0	34	35.0	81	54	59	36	46	46	618	**WSV25SOMD**	400	400	
	30	25	50	49	35.5	39	37.5	90	62	64	41	50	50	889	**WSV30SOMD**	400	400	
	38	32	60	57	41.0	43	37.0	96	72	68	50	65	60	1337	**WSV38SOMD**	315	315	

[1]) Pressure shown = item deliverable

[3]) L = light series; [4]) S = heavy series

[5]) Bulkhead thickness min.
06-18 L and 06–16 S = 3 mm
22-42 L and 20–38 S = 4 mm

$\frac{\text{PN (bar)}}{10}$ = PN (MPa)

Delivery without nut and ring. Information on ordering complete fittings see page I7.

*Please add the **suffixes** below according to the material/surface required.

Order code suffixes		
Material	Suffix surface and material	Example
Steel	CF	WSV16SOMDCF
Stainless Steel	71	WSV16SOMD71
Brass	MS	WSV18LOMDMS

KOVAZ.cz

EW Swivel nut elbow

EO 24° cone end / EO 24° DKO swivel

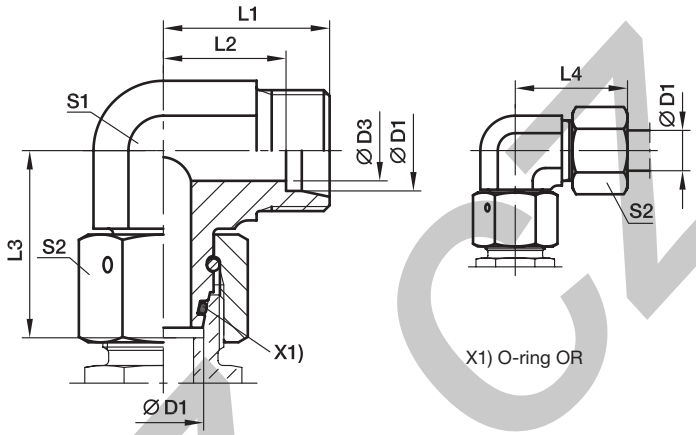

Series	D1	D3	L1	L2	L3	L4	S1	S2	Weight g/1 piece	Order code*	PN (bar)[1] Steel	PN (bar)[1] 71
L[3])	06	4	19	12.0	26.0	27	12	14	34	**EW06LOMD**	500	315
	08	6	21	14.0	27.5	29	12	17	43	**EW08LOMD**	500	315
	10	8	22	15.0	29.0	30	14	19	58	**EW10LOMD**	500	315
	12	10	24	17.0	29.5	32	17	22	81	**EW12LOMD**	400	315
	15	12	28	21.0	32.5	36	19	27	128	**EW15LOMD**	400	315
	18	15	31	23.5	35.5	40	24	32	197	**EW18LOMD**	400	315
	22	19	35	27.5	38.5	44	27	36	258	**EW22LOMD**	250	160
	28	24	38	30.5	41.5	47	36	41	370	**EW28LOMD**	250	160
	35	30	45	34.5	51.0	56	41	50	593	**EW35LOMD**	250	160
	42	36	51	40.0	56.0	63	50	60	993	**EW42LOMD**	250	160
S[4])	06	4	23	16.0	27.0	31	12	17	48	**EW06SOMD**	800	630
	08	5	24	17.0	27.5	32	14	19	65	**EW08SOMD**	800	630
	10	6	25	17.5	30.0	34	17	22	92	**EW10SOMD**	800	630
	12	8	29	21.5	31.0	38	17	24	107	**EW12SOMD**	630	630
	16	12	33	24.5	36.5	43	24	30	212	**EW16SOMD**	630	400
	20	16	37	26.5	44.5	48	27	36	309	**EW20SOMD**	420	400
	25	20	42	30.0	50.0	54	36	46	547	**EW25SOMD**	420	400
	30	25	49	35.5	55.0	62	41	50	744	**EW30SOMD**	420	400
	38	32	57	41.0	63.0	72	50	60	1222	**EW38SOMD**	420	315

[1]) Pressure shown = item deliverable

[3]) L = light series; [4]) S = heavy series

$\frac{PN\ (bar)}{10} = PN\ (MPa)$

Delivery without nut and ring. Information on ordering complete fittings or alternative sealing materials see page I7.

*Please add the **suffixes** below according to the material/surface required.

Order code suffixes			
Material	Suffix surface and material	Example	Standard sealing material (no additonal. suffix needed)
Steel	CF	EW16SOMDCF	NBR
Stainless Steel	71	EW16SOMD71	VIT

KOVI.cz

EV Swivel nut 45° elbow

EO 24° cone end / EO 24° DKO swivel

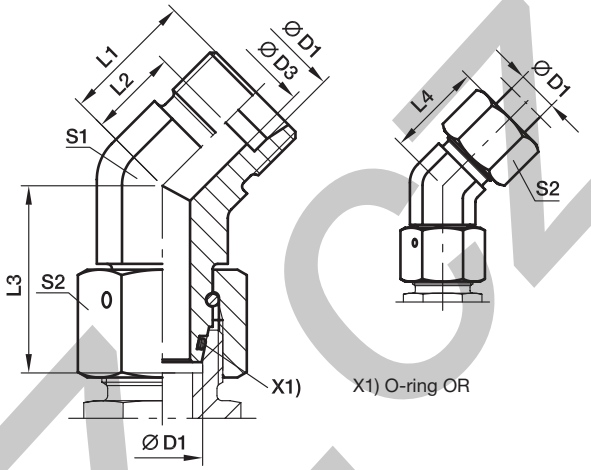

Series	D1	D3	L1	L2	L3	L4	S1	S2	Weight g/1 piece	Order code*	PN (bar)[1] Steel	71
L[3])	06	4	16.0	9.0	26.0	24	14	14	37	**EV06LOMD**	315	315
	08	6	19.0	12.0	27.5	27	14	17	49	**EV08LOMD**	315	315
	10	8	19.0	12.0	29.0	27	19	19	77	**EV10LOMD**	315	315
	12	10	21.0	14.0	29.5	29	19	22	86	**EV12LOMD**	315	315
	15	12	24.0	17.0	32.5	32	22	27	144	**EV15LOMD**	315	315
	18	15	24.0	16.5	35.5	33	27	32	210	**EV18LOMD**	315	315
	22	19	26.0	18.5	38.5	35	30	36	270	**EV22LOMD**	160	160
	28	24	30.5	23.0	41.5	40	36	41	385	**EV28LOMD**	160	160
	35	30	37.0	26.5	51.0	48	50	50	805	**EV35LOMD**	160	160
	42	36	37.0	26.0	56.0	49	50	60	887	**EV42LOMD**	160	160
S[4])	06	4	16.0	9.0	27.0	24	14	17	50	**EV06SOMD**	630	630
	08	5	19.0	12.0	27.5	27	19	19	80	**EV08SOMD**	630	630
	10	7	21.0	13.5	30.0	30	19	22	95	**EV10SOMD**	630	630
	12	8	24.0	16.5	31.0	33	22	24	137	**EV12SOMD**	630	630
	16	12	24.0	15.5	36.5	34	27	30	217	**EV16SOMD**	400	400
	20	16	26.5	16.0	44.5	38	30	36	313	**EV20SOMD**	400	400
	25	20	30.5	18.5	50.0	43	36	46	529	**EV25SOMD**	400	400
	30	25	37.0	23.5	55.0	50	50	50	940	**EV30SOMD**	400	400
	38	32	37.0	21.0	63.0	52	50	60	1055	**EV38SOMD**	315	315

[1]) Pressure shown = item deliverable

[3]) L = light series; [4]) S = heavy series

$\frac{PN\ (bar)}{10}$ = PN (MPa)

Delivery without nut and ring. Information on ordering complete fittings or alternative sealing materials see page I7.

*Please add the **suffixes** below according to the material/surface required.

Order code suffixes			
Material	Suffix surface and material	Example	Standard sealing material (no additonal. suffix needed)
Steel	CF	EV16SOMDCF	NBR
Stainless Steel	71	EV16SOMD71	VIT

KOMAT.CZ

ET Swivel nut branch tee

EO 24° cone end / EO 24° DKO swivel

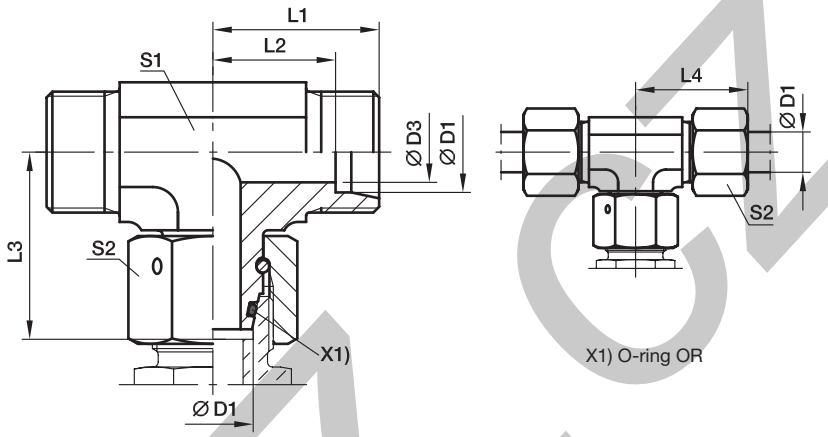

Series	D1	D3	L1	L2	L3	L4	S1	S2	Weight g/1 piece	Order code*	PN (bar)[1] Steel	PN (bar)[1] 71
L[3])	06	4	19	12.0	26.0	27	12	14	42	**ET06LOMD**	500	315
	08	6	21	14.0	27.5	29	12	17	53	**ET08LOMD**	500	315
	10	8	22	15.0	29.0	30	14	19	71	**ET10LOMD**	500	315
	12	10	24	17.0	29.5	32	19	22	97	**ET12LOMD**	400	315
	15	12	28	21.0	32.5	36	19	27	159	**ET15LOMD**	400	315
	18	15	31	23.5	35.5	40	24	32	239	**ET18LOMD**	400	315
	22	19	35	27.5	38.5	44	27	36	308	**ET22LOMD**	250	160
	28	24	38	30.5	41.5	47	36	41	449	**ET28LOMD**	250	160
	35	30	45	34.5	51.0	56	41	50	679	**ET35LOMD**	250	160
	42	36	51	40.0	56.0	63	50	60	1131	**ET42LOMD**	250	160
S[4])	06	4	23	16.0	27.0	31	12	17	63	**ET06SOMD**	800	630
	08	5	24	17.0	27.5	32	14	19	79	**ET08SOMD**	800	630
	10	6	25	17.5	30.0	34	17	22	113	**ET10SOMD**	800	630
	12	8	29	21.5	31.0	38	17	24	136	**ET12SOMD**	630	630
	16	12	33	24.5	36.5	43	24	30	239	**ET16SOMD**	630	400
	20	16	37	26.5	44.5	48	27	36	388	**ET20SOMD**	420	400
	25	20	42	30.0	50.0	54	36	46	652	**ET25SOMD**	420	400
	30	25	49	35.5	55.0	62	41	50	905	**ET30SOMD**	420	400
	38	32	57	41.0	63.0	72	50	60	1462	**ET38SOMD**	420	315

[1]) Pressure shown = item deliverable

[3]) L = light series; [4]) S = heavy series

$\frac{\text{PN (bar)}}{10}$ = PN (MPa)

Delivery without nut and ring. Information on ordering complete fittings or alternative sealing materials see page I7.

*Please add the **suffixes** below according to the material/surface required.

Order code suffixes			
Material	Suffix surface and material	Example	Standard sealing material (no additonal. suffix needed)
Steel	CF	ET16SOMDCF	NBR
Stainless Steel	71	ET16SOMD71	VIT

EL Swivel nut run tee

EO 24° cone end / EO 24° DKO swivel

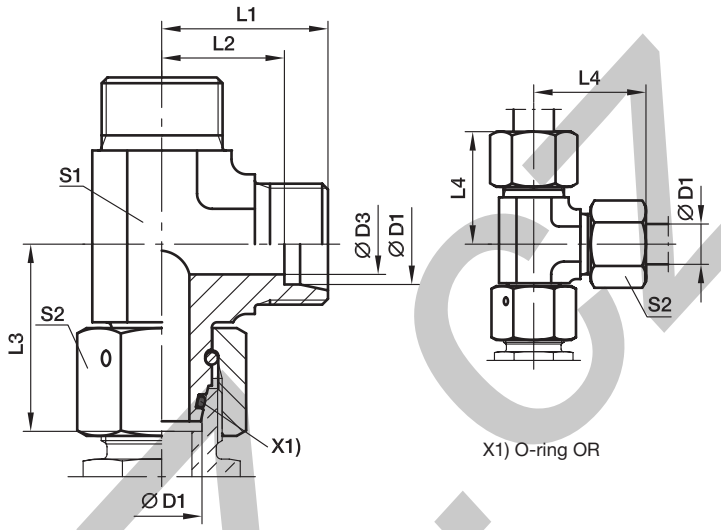

Series	D1	D3	L1	L2	L3	L4	S1	S2	Weight g/1 piece	Order code*	PN (bar)[1] Steel	71
L[3])	06	4	19	12.0	26.0	27	12	14	44	**EL06LOMD**	500	315
	08	6	21	14.0	27.5	29	12	17	53	**EL08LOMD**	500	315
	10	8	22	15.0	29.0	30	14	19	68	**EL10LOMD**	500	315
	12	10	24	17.0	29.5	32	19	22	95	**EL12LOMD**	400	315
	15	12	28	21.0	32.5	36	19	27	151	**EL15LOMD**	400	315
	18	15	31	23.5	35.5	40	24	32	233	**EL18LOMD**	400	315
	22	19	35	27.5	38.5	44	27	36	309	**EL22LOMD**	250	160
	28	24	38	30.5	41.5	47	36	41	436	**EL28LOMD**	250	160
	35	30	45	34.5	51.0	56	41	50	666	**EL35LOMD**	250	160
	42	36	51	40.0	56.0	63	50	60	1163	**EL42LOMD**	250	160
S[4])	06	4	23	16.0	27.0	31	12	17	65	**EL06SOMD**	800	630
	08	5	24	17.0	27.5	32	14	19	84	**EL08SOMD**	800	630
	10	6	25	17.5	30.0	34	17	22	118	**EL10SOMD**	800	630
	12	8	29	21.5	31.0	38	17	24	136	**EL12SOMD**	630	630
	16	12	33	24.5	36.5	43	24	30	260	**EL16SOMD**	630	400
	20	16	37	26.5	44.5	48	27	36	375	**EL20SOMD**	420	400
	25	20	42	30.0	50.0	54	36	46	655	**EL25SOMD**	420	400
	30	25	49	35.5	55.0	62	41	50	906	**EL30SOMD**	420	400
	38	32	57	41.0	63.0	72	50	60	1472	**EL38SOMD**	420	315

[1]) Pressure shown = item deliverable

[3]) L = light series; [4]) S = heavy series

$\frac{PN\ (bar)}{10} = PN\ (MPa)$

Delivery without nut and ring. Information on ordering complete fittings or alternative sealing materials see page I7.

*Please add the **suffixes** below according to the material/surface required.

Order code suffixes			
Material	Suffix surface and material	Example	Standard sealing material (no additonal. suffix needed)
Steel	CF	EL16SOMDCF	NBR
Stainless Steel	71	EL16SOMD71	VIT

KOMO.07

DA Distance piece adapter

EO 24° DKO swivel / EO 24° cone end

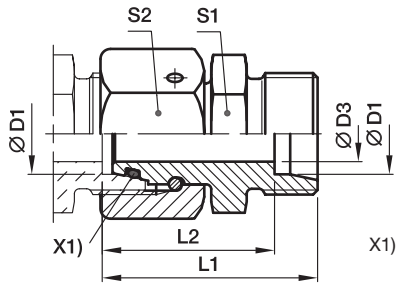

X1) O-ring OR

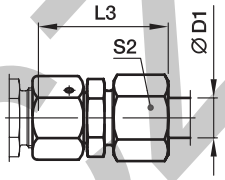

Series	D1	D3	L1	L2	L3	S1	S2	Weight g/1 piece	Order code*	PN (bar)[1] Steel	71	MS
L[3])	06	2,5	43.0	36	51	12	14	33	**DA06LOMD**	500	315	200
	08	4.0	43.0	36	51	14	17	46	**DA08LOMD**	500	315	200
	10	6.0	43.0	36	51	17	19	60	**DA10LOMD**	500	315	200
	12	8.0	43.0	36	51	19	22	75	**DA12LOMD**	400	315	200
	15	10.0	43.0	36	51	24	27	118	**DA15LOMD**	400	315	200
	18	13.0	43.5	36	52	27	32	153	**DA18LOMD**	400	315	200
	22	17.0	47.5	40	56	32	36	210	**DA22LOMD**	250	160	100
	28	22.0	47.5	40	57	41	41	279	**DA28LOMD**	250	160	100
	35	28.0	60.5	50	72	46	50	468	**DA35LOMD**	250	160	100
	42	34.0	71.0	60	83	55	60	802	**DA42LOMD**	250	160	100
S[4])	06	2.5	43.0	36	51	14	17	48	**DA06SOMD**	800	630	400
	08	4.0	43.0	36	51	17	19	64	**DA08SOMD**	800	630	400
	10	6.0	43.5	36	52	19	22	81	**DA10SOMD**	800	630	400
	12	8.0	43.5	36	52	22	24	97	**DA12SOMD**	630	630	400
	16	11.0	48.5	40	58	27	30	166	**DA16SOMD**	630	400	250
	20	14.0	56.5	46	68	32	36	265	**DA20SOMD**	420	400	250
	25	18.0	62.0	50	74	41	46	466	**DA25SOMD**	420	400	250
	30	23.0	69.5	56	83	46	50	601	**DA30SOMD**	420	400	250
	38	30.0	76.0	60	91	55	60	871	**DA38SOMD**	420	315	200

[1]) Pressure shown = item deliverable

[3]) L = light series; [4]) S = heavy series

$\frac{\text{PN (bar)}}{10}$ = PN (MPa)

Delivery without nut and ring. Information on ordering complete fittings or alternative sealing materials see page I7.

*Please add the **suffixes** below according to the material/surface required.

Order code suffixes			
Material	Suffix surface and material	Example	Standard sealing material (no additonal. suffix needed)
Steel	CF	DA16SOMDCF	NBR
Stainless Steel	71	DA16SOMD71	VIT
Brass	MS	DA16SOMDMS	NBR

KOWA.CZ

RED Tube end reducer

EO 24° DKO swivel / EO 24° cone end

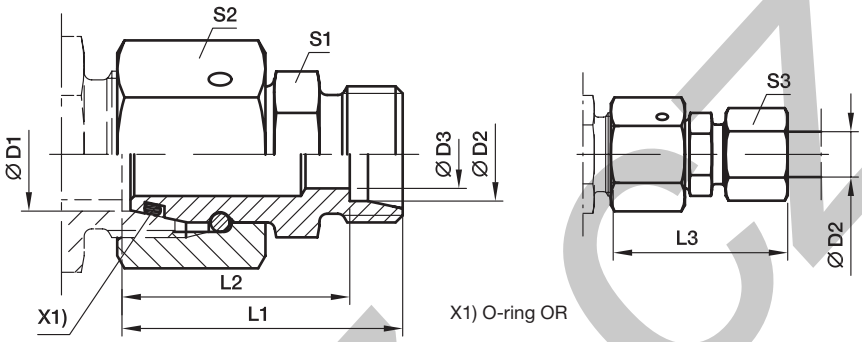

X1) O-ring OR

Series [2) 3) 4)]	D1	D2	D3	L1	L2	L3	S1	S2	S3	Weight g/1 piece	Order code*	PN (bar)[1)] Steel	71
L/LL	06	04	2.5	28.5	24.5	34.0	9	14	10	17	**RED06L/04LLOMD**	100	100
L	08	06	4.0	30.5	23.5	38.0	12	17	14	29	**RED08/06LOMD**	500	315
L	10	06	4.0	32.0	25.0	40.0	14	19	14	36	**RED10/06LOMD**	500	315
L	10	08	6.0	32.0	25.0	40.0	14	19	17	38	**RED10/08LOMD**	500	315
L	12	06	4.0	32.0	25.0	40.0	17	22	14	49	**RED12/06LOMD**	400	315
L	12	08	6.0	32.0	25.0	40.0	17	22	17	49	**RED12/08LOMD**	400	315
L	12	10	8.0	33.0	26.0	41.0	17	22	19	51	**RED12/10LOMD**	400	315
L	15	06	4.0	35.5	28.5	43.0	19	27	14	81	**RED15/06LOMD**	400	315
L	15	08	6.0	35.5	28.5	43.0	19	27	17	85	**RED15/08LOMD**	400	315
L	15	10	8.0	36.5	29.5	44.0	19	27	19	83	**RED15/10LOMD**	400	315
L	15	12	10.0	36.5	29.5	44.0	19	27	22	83	**RED15/12LOMD**	400	315
L	18	06	4.0	35.0	28.0	43.0	24	32	14	109	**RED18/06LOMD**	400	315
L	18	08	6.0	35.0	28.0	43.0	24	32	17	111	**RED18/08LOMD**	400	315
L	18	10	8.0	36.0	29.0	44.0	24	32	19	110	**RED18/10LOMD**	400	315
L	18	12	10.0	36.0	29.0	44.0	24	32	22	110	**RED18/12LOMD**	400	315
L	18	15	12.0	37.0	30.0	45.0	24	32	27	115	**RED18/15LOMD**	400	315
L/S	18	16	12.0	40.0	31.5	49.5	27	32	30	138	**RED18L/16SOMD**	400	315
L	22	06	4.0	39.0	32.0	47.0	27	36	14	158	**RED22/06LOMD**	250	160
L	22	08	6.0	39.0	32.0	47.0	27	36	17	158	**RED22/08LOMD**	250	160
L	22	10	8.0	40.0	33.0	48.0	27	36	19	159	**RED22/10LOMD**	250	160
L	22	12	10.0	40.0	33.0	48.0	27	36	22	157	**RED22/12LOMD**	250	160
L	22	15	12.0	41.0	34.0	49.0	27	36	27	164	**RED22/15LOMD**	250	160
L/S	22	16	12.0	43.0	34.5	52.5	27	36	30	173	**RED22L/16SOMD**	250	160
L	22	18	15.0	41.0	33.5	50.0	27	36	32	167	**RED22/18LOMD**	250	160
L/S	22	20	16.0	45.0	34.5	56.0	32	36	36	203	**RED22L/20SOMD**	250	160
L	28	06	4.0	41.0	34.0	49.0	32	41	14	219	**RED28/06LOMD**	250	160
L	28	08	6.0	41.0	34.0	49.0	32	41	17	221	**RED28/08LOMD**	250	160
L	28	10	8.0	42.0	35.0	50.0	32	41	19	213	**RED28/10LOMD**	250	160
L	28	12	10.0	42.0	35.0	50.0	32	41	22	213	**RED28/12LOMD**	250	160
L	28	15	12.0	43.0	36.0	51.0	32	41	27	218	**RED28/15LOMD**	250	160
L/S	28	16	12.0	45.0	36.5	54.5	32	41	30	227	**RED28L/16SOMD**	250	160
L	28	18	15.0	43.0	35.5	52.0	32	41	32	220	**RED28/18LOMD**	250	160
L	28	22	19.0	45.0	37.5	54.0	32	41	36	222	**RED28/22LOMD**	250	160
L/S	28	25	20.0	50.0	38.0	62.0	41	41	46	300	**RED28L/25SOMD**	250	160
L	35	06	4.0	44.0	37.0	52.0	41	50	14	318	**RED35/06LOMD**	250	160
L	35	08	6.0	44.0	37.0	52.0	41	50	17	318	**RED35/08LOMD**	250	160
L	35	10	8.0	45.0	38.0	53.0	41	50	19	318	**RED35/10LOMD**	250	160
L	35	12	10.0	45.0	38.0	53.0	41	50	22	324	**RED35/12LOMD**	250	160
L	35	15	12.0	46.0	39.0	54.0	41	50	27	328	**RED35/15LOMD**	250	160
L	35	18	15.0	46.0	38.5	55.0	41	50	32	328	**RED35/18LOMD**	250	160
L	35	22	19.0	48.0	40.5	57.0	41	50	36	331	**RED35/22LOMD**	250	160

KOMAC

RED Tube end reducer

EO 24° DKO swivel / EO 24° cone end

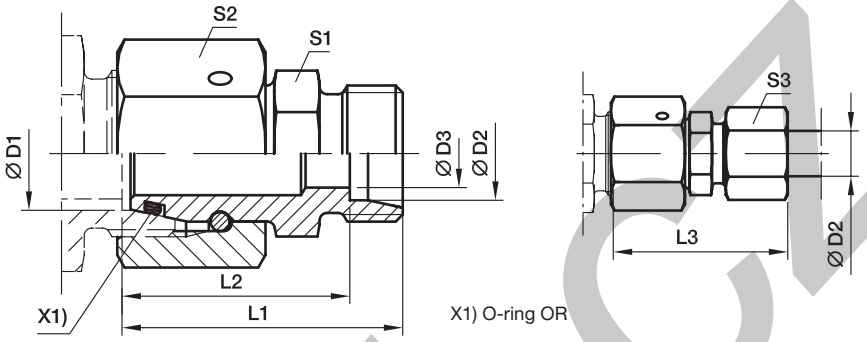

Series 2) 3) 4)	D1	D2	D3	L1	L2	L3	S1	S2	S3	Weight g/1 piece	Order code*	PN (bar)1) Steel	71
L/S	35	25	20.0	52.0	40.0	64.0	41	50	46	366	**RED35L/25SOMD**	250	160
L	35	28	24.0	48.0	40.5	57.0	41	50	41	327	**RED35/28LOMD**	250	160
L/S	35	30	25.0	55.0	41.5	68.0	46	50	50	435	**RED35L/30SOMD**	250	160
L	42	10	8.0	48.5	41.5	56.0	50	60	19	537	**RED42/10LOMD**	250	160
L	42	12	10.0	48.5	41.5	56.0	50	60	22	538	**RED42/12LOMD**	250	160
L	42	15	12.0	49.5	42.5	58.0	50	60	27	534	**RED42/15LOMD**	250	160
L	42	18	15.0	49.5	42.0	58.0	50	60	32	544	**RED42/18LOMD**	250	160
L	42	22	19.0	51.5	44.0	60.0	50	60	36	543	**RED42/22LOMD**	250	160
L	42	28	24.0	51.5	44.0	61.0	50	60	41	539	**RED42/28LOMD**	250	160
L/S	42	30	25.0	57.5	44.0	70.5	50	60	50	588	**RED42L/30SOMD**	250	160
L	42	35	30.0	53.5	43.0	65.0	50	60	50	541	**RED42/35LOMD**	250	160
L/S	42	38	32.0	61.5	45.5	76.0	55	60	60	701	**RED42L/38SOMD**	250	160

1) Pressure shown = item deliverable

2) LL = very light series; 3) L = light series; 4) S = heavy series

$\frac{\text{PN (bar)}}{10}$ = PN (MPa)

Delivery without nut and ring. Information on ordering complete fittings or alternative sealing materials see page I7.

*Please add the **suffixes** below according to the material/surface required.

Order code suffixes			
Material	Suffix surface and material	Example	Standard sealing material (no additonal. suffix needed)
Steel	CF	RED18/15LOMDCF	NBR
Stainless Steel	71	RED18/15LOMD71	VIT

KOVAL.CZ

RED Tube end reducer

EO 24° DKO swivel / EO 24° cone end

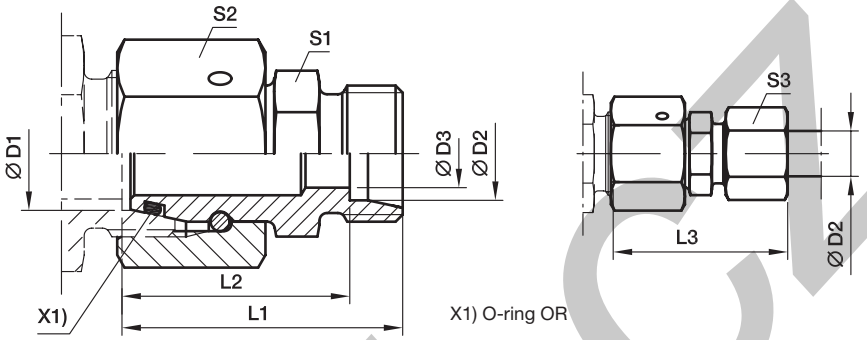

Series 3) 4)	D1	D2	D3	L1	L2	L3	S1	S2	S3	Weight g/1 piece	Order code*	PN (bar)1) Steel	PN (bar)1) 71
S	08	06	4	34.0	27.0	42	14	19	17	42	**RED08/06SOMD**	800	630
S	10	06	4	34.5	27.5	42	17	22	17	55	**RED10/06SOMD**	800	630
S	10	08	5	34.5	27.5	42	17	22	19	58	**RED10/08SOMD**	800	630
S	12	06	4	36.0	29.0	44	17	24	17	66	**RED12/06SOMD**	630	630
S	12	08	5	36.0	29.0	44	17	24	19	68	**RED12/08SOMD**	630	630
S	12	10	7	37.0	29.5	46	19	24	22	75	**RED12/10SOMD**	630	630
S	16	06	4	39.0	32.0	47	22	30	17	112	**RED16/06SOMD**	630	400
S	16	08	5	39.0	32.0	47	22	30	19	114	**RED16/08SOMD**	630	400
S	16	10	7	39.0	31.5	48	22	30	22	115	**RED16/10SOMD**	630	400
S	16	12	8	39.0	31.5	48	22	30	24	118	**RED16/12SOMD**	630	400
S/L	16	15	11	39.0	32.0	47	24	30	27	120	**RED16S/15LOMD**	400	315
S	20	06	4	43.0	36.0	51	27	36	17	172	**RED20/06SOMD**	420	400
S	20	08	5	43.0	36.0	51	27	36	19	174	**RED20/08SOMD**	420	400
S	20	10	7	43.0	35.5	52	27	36	22	174	**RED20/10SOMD**	420	400
S	20	12	8	43.0	35.5	52	27	36	24	177	**RED20/12SOMD**	420	400
S/L	20	15	12	43.0	36.0	51	27	36	27	173	**RED20S/15LOMD**	400	315
S	20	16	12	45.0	36.5	55	27	36	30	182	**RED20/16SOMD**	420	400
S/L	20	18	14	43.0	35.5	51	27	36	32	178	**RED20S/18LOMD**	400	315
S	25	06	4	45.5	38.5	53	32	46	17	294	**RED25/06SOMD**	420	400
S	25	08	5	45.5	38.5	53	32	46	19	295	**RED25/08SOMD**	420	400
S	25	10	7	45.5	38.0	54	32	46	22	296	**RED25/10SOMD**	420	400
S	25	12	8	45.5	38.0	54	32	46	24	299	**RED25/12SOMD**	420	400
S	25	16	12	47.5	39.0	57	32	46	30	304	**RED25/16SOMD**	420	400
S/L	25	18	15	45.5	38.0	54	32	46	32	299	**RED25S/18LOMD**	400	315
S	25	20	16	49.5	39.0	61	32	46	36	315	**RED25/20SOMD**	420	400
S/L	25	22	18	47.5	40.0	56	32	46	36	304	**RED25S/22LOMD**	250	160
S	30	06	4	51.0	44.0	59	41	50	17	412	**RED30/06SOMD**	420	400
S	30	08	5	51.0	44.0	59	41	50	19	404	**RED30/08SOMD**	420	400
S	30	10	7	51.0	43.5	60	41	50	22	405	**RED30/10SOMD**	420	400
S	30	12	8	51.0	43.5	60	41	50	24	405	**RED30/12SOMD**	420	400
S	30	16	12	53.0	44.5	63	41	50	30	412	**RED30/16SOMD**	420	400
S	30	20	16	55.0	44.5	66	41	50	36	421	**RED30/20SOMD**	420	400
S/L	30	22	19	53.0	45.5	61	41	50	36	406	**RED30S/22LOMD**	250	160
S	30	25	20	57.0	45.0	69	41	50	46	439	**RED30/25SOMD**	420	400
S/L	30	28	23	53.0	45.5	62	41	50	41	406	**RED30S/28LOMD**	250	160
S	38	06	4	54.5	47.5	62	50	60	17	556	**RED38/06SOMD**	420	315
S	38	08	5	54.5	47.5	62	50	60	19	581	**RED38/08SOMD**	420	315
S	38	10	7	54.5	47.0	63	50	60	22	579	**RED38/10SOMD**	420	315
S	38	12	8	54.5	47.0	63	50	60	24	577	**RED38/12SOMD**	420	315
S	38	16	12	56.5	48.0	66	50	60	30	580	**RED38/16SOMD**	420	315

RED Tube end reducer

EO 24° DKO swivel / EO 24° cone end

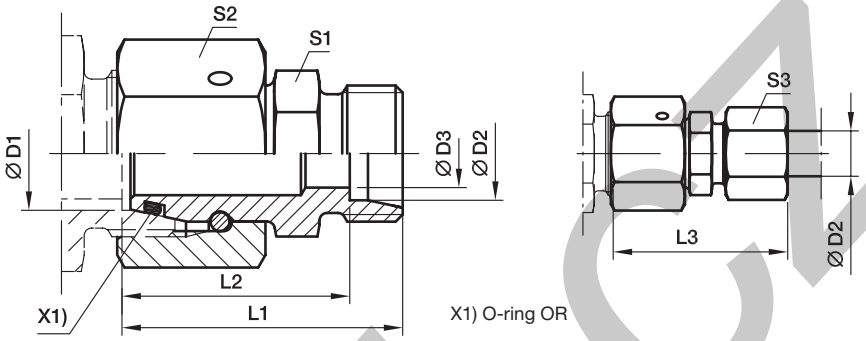

Series 3) 4)	D1	D2	D3	L1	L2	L3	S1	S2	S3	Weight g/1 piece	Order code*	PN (bar)1) Steel	71
S	38	20	16	58.5	48.0	70	50	60	36	601	**RED38/20SOMD**	420	315
S	38	25	20	60.5	48.5	73	50	60	46	615	**RED38/25SOMD**	420	315
S/L	38	28	24	56.5	49.0	65	50	60	41	573	**RED38S/28LOMD**	250	160
S	38	30	25	62.5	49.0	76	50	60	50	625	**RED38/30SOMD**	420	315
S/L	38	35	30	58.5	48.0	69	50	60	50	588	**RED38S/35LOMD**	250	160

1) Pressure shown = item deliverable

3) L = light series; 4) S = heavy series

$\frac{PN\ (bar)}{10}$ = PN (MPa)

Delivery without nut and ring. Information on ordering complete fittings or alternative sealing materials see page I7.

*Please add the **suffixes** below according to the material/surface required.

Order code suffixes			
Material	Suffix surface and material	Example	Standard sealing material (no additonal. suffix needed)
Steel	CF	RED16/12SOMDCF	NBR
Stainless Steel	71	RED16/12SOMD71	VIT

KOVAZ.CZ

GZ Swivel union

EO 24° DKO swivel

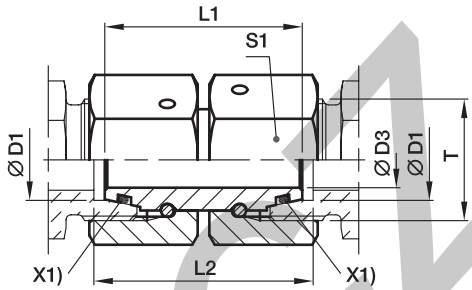

X1) O-ring OR

Series	D1	T	D3	L1	L2	S1	Weight g/1 piece	Order code*	PN (bar)[1] Steel	71
L[3])	06	M 12×1.5	2.5	33	33	14	28	**GZ06L**	500	315
	08	M 14×1.5	4.0	33	33	17	41	**GZ08L**	500	315
	10	M 16×1.5	6.0	34	34	19	53	**GZ10L**	500	315
	12	M 18×1.5	8.0	34	34	22	71	**GZ12L**	400	315
	15	M 22×1.5	10.0	39	39	27	129	**GZ15L**	400	315
	18	M 26×1.5	13.0	36	38	32	165	**GZ18L**	400	315
	22	M 30×2.0	17.0	42	44	36	243	**GZ22L**	250	160
	28	M 36×2.0	22.0	46	48	41	319	**GZ28L**	250	160
	35	M 45×2.0	28.0	48	52	50	449	**GZ35L**	250	160
	42	M 52×2.0	34.0	52	57	60	737	**GZ42L**	250	160
S[4])	06	M 14×1.5	2.5	32	33	17	41	**GZ06S**	800	630
	08	M 16×1.5	4.0	33	34	19	54	**GZ08S**	800	630
	10	M 18×1.5	6.0	33	35	22	74	**GZ10S**	800	630
	12	M 20×1.5	8.0	36	38	24	95	**GZ12S**	630	630
	16	M 24×1.5	11.0	39	42	30	172	**GZ16S**	630	400
	20	M 30×2.0	14.0	44	48	36	261	**GZ20S**	420	400
	25	M 36×2.0	18.0	46	53	46	477	**GZ25S**	420	400
	30	M 42×2.0	23.0	52	62	50	605	**GZ30S**	420	400
	38	M 52×2.0	30.0	52	67	60	826	**GZ38S**	420	315

[1]) Pressure shown = item deliverable

[3]) L = light series; [4]) S = heavy series

$\frac{PN\ (bar)}{10}$ = PN (MPa)

Information on ordering complete fittings or alternative sealing materials see page I7.

*Please add the **suffixes** below according to the material/surface required.

Order code suffixes			
Material	Suffix surface and material	Example	Standard sealing material (no additonal. suffix needed)
Steel	CF	GZ16SCF	NBR
Stainless Steel	71	GZ16S71	VIT

KOVA-CZ

GZR Swivel reducer

EO 24° DKO swivel

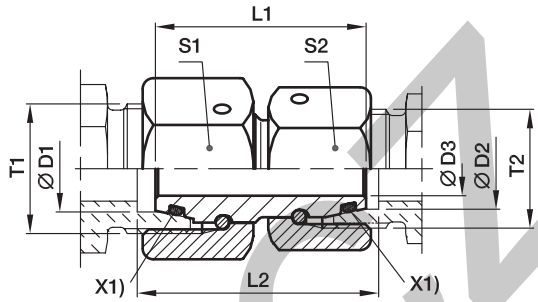

X1) O-ring OR

Series 3) 4)	D1	D2	T1	T2	D3	L1	L2	S1	S2	Weight g/1 piece	Order code*	PN (bar)1) Steel	PN (bar)1) 71
L/S	06	06	M 14×1.5	M 12×1.5	2.5	32.5	33.0	17	14	34	**GZR06L/06S**	500	500
L	08	06	M 14×1.5	M 12×1.5	2.5	33.0	33.0	17	14	36	**GZR08/06L**	500	500
L/S	08	08	M 16×1.5	M 14×1.5	4.0	32.5	34.0	19	17	48	**GZR08L/08S**	500	500
L	10	06	M 16×1.5	M 12×1.5	2.5	34.0	34.0	19	14	44	**GZR10/06L**	500	500
L	10	08	M 16×1.5	M 14×1.5	4.0	34.0	34.0	19	17	50	**GZR10/08L**	500	500
L/S	10	10	M 18×1.5	M 16×1.5	6.0	34.0	34.5	22	19	63	**GZR10L/10S**	500	500
L	12	06	M 18×1.5	M 12×1.5	2.5	34.0	34.0	22	14	56	**GZR12/06L**	400	400
L	12	08	M 18×1.5	M 14×1.5	4.0	34.0	34.0	22	17	62	**GZR12/08L**	400	400
L	12	10	M 18×1.5	M 16×1.5	6.0	34.0	34.0	22	19	65	**GZR12/10L**	400	400
L/S	12	12	M 20×1.5	M 18×1.5	8.0	36.5	37.5	24	22	85	**GZR12L/12S**	400	400
L	15	08	M 22×1.5	M 14×1.5	4.0	39.0	39.0	27	17	98	**GZR15/08L**	400	400
L	15	10	M 22×1.5	M 16×1.5	6.0	39.0	39.0	27	19	101	**GZR15/10L**	400	400
L	15	12	M 22×1.5	M 18×1.5	8.0	39.0	39.0	27	22	108	**GZR15/12L**	400	400
L	18	10	M 26×1.5	M 16×1.5	6.0	37.0	37.5	32	19	125	**GZR18/10L**	400	400
L	18	12	M 26×1.5	M 18×1.5	8.0	36.5	37.5	32	22	132	**GZR18/12L**	400	400
L	18	15	M 26×1.5	M 22×1.5	10.0	38.5	38.5	32	27	155	**GZR18/15L**	400	400
L/S	18	16	M 26×1.5	M 24×1.5	11.0	39.0	39.0	32	30	177	**GZR18L/16S**	400	400
L	22	12	M 30×2.0	M 18×1.5	8.0	42.5	43.5	36	22	195	**GZR22/12L**	250	250
L	22	15	M 30×2.0	M 22×1.5	10.0	42.5	43.5	36	27	215	**GZR22/15L**	250	250
L	22	18	M 30×2.0	M 26×1.5	13.0	42.0	44.0	36	32	228	**GZR22/18L**	250	250
L/S	22	20	M 30×2.0	M 30×2.0	14.0	44.0	47.0	36	36	266	**GZR22L/20S**	250	250
L	28	15	M 36×2.0	M 22×1.5	10.0	46.5	47.5	41	27	143	**GZR28/15L**	250	250
L	28	18	M 36×2.0	M 26×1.5	13.0	39.5	48.0	41	32	311	**GZR28/18L**	250	250
L	28	22	M 36×2.0	M 30×2.0	17.0	46.0	46.0	41	36	309	**GZR28/22L**	250	250
L/S	28	25	M 36×2.0	M 36×2.0	18.0	46.0	50.5	41	46	419	**GZR28L/25S**	250	250
L	35	18	M 45×2.0	M 26×1.5	13.0	48.0	51.0	50	32	430	**GZR35/18L**	250	250
L	35	22	M 45×2.0	M 30×2.0	17.0	48.0	51.0	50	36	429	**GZR35/22L**	250	250
L	35	28	M 45×2.0	M 36×2.0	22.0	48.0	51.0	50	41	415	**GZR35/28L**	250	250
L/S	35	30	M 45×2.0	M 42×2.0	23.0	52.0	59.0	50	50	577	**GZR35L/30S**	250	250
L	42	22	M 52×2.0	M 30×2.0	17.0	52.0	55.5	60	36	653	**GZR42/22L**	250	250
L	42	28	M 52×2.0	M 36×2.0	22.0	52.0	55.5	60	41	648	**GZR42/28L**	250	250
L	42	35	M 52×2.0	M 45×2.0	28.0	52.0	56.5	60	50	662	**GZR42/35L**	250	250
L/S	42	38	M 52×2.0	M 52×2.0	30.0	52.0	62.0	60	60	822	**GZR42L/38S**	250	250
S	08	06	M 16×1.5	M 14×1.5	2.5	33.0	34.0	19	17	49	**GZR08/06S**	800	800
S	10	06	M 18×1.5	M 14×1.5	2.5	33.0	34.5	22	17	60	**GZR10/06S**	800	800
S	10	08	M 18×1.5	M 16×1.5	4.0	33.0	34.5	22	19	66	**GZR10/08S**	800	800
S	12	06	M 20×1.5	M 14×1.5	2.5	36.0	37.5	24	17	77	**GZR12/06S**	630	630
S	12	08	M 20×1.5	M 16×1.5	4.0	36.0	37.5	24	19	82	**GZR12/08S**	630	630
S	12	10	M 20×1.5	M 18×1.5	6.0	36.0	38.0	24	22	89	**GZR12/10S**	630	630
S	16	10	M 24×1.5	M 18×1.5	6.0	39.0	41.5	30	22	138	**GZR16/10S**	630	630
S	16	12	M 24×1.5	M 20×1.5	8.0	39.0	41.5	30	24	143	**GZR16/12S**	630	630
S/L	16	15	M 24×1.5	M 22×1.5	10.0	39.5	41.5	30	27	153	**GZR16S/15L**	400	400
S	20	12	M 30×2.0	M 20×1.5	8.0	44.0	47.0	36	24	204	**GZR20/12S**	420	420

GZR Swivel reducer

EO 24° DKO swivel

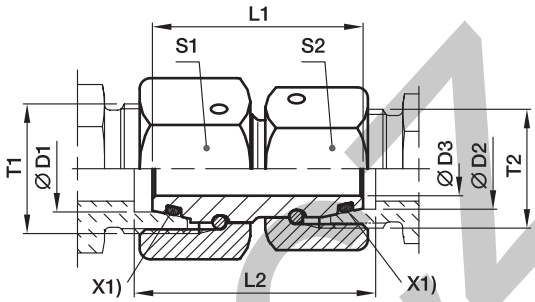

X1) O-ring OR

Series 3) 4)	D1	D2	T1	T2	D3	L1	L2	S1	S2	Weight g/1 piece	Order code*	PN (bar)1) Steel	71
S	20	16	M 30×2.0	M 24×1.5	11.0	44	47.5	36	30	232	**GZR20/16S**	420	420
S/L	20	18	M 30×2.0	M 26×1.5	13.0	44	47.0	36	32	224	**GZR20S/18L**	400	400
S	25	16	M 36×2.0	M 24×1.5	11.0	46	51.0	46	30	224	**GZR25/16S**	420	420
S	25	20	M 36×2.0	M 30×2.0	14.0	46	51.5	46	36	364	**GZR25/20S**	420	420
S/L	25	22	M 36×2.0	M 30×2.0	17.0	46	50.5	46	36	475	**GZR25S/22L**	250	250
S	30	16	M 42×2.0	M 24×1.5	11.0	52	58.5	50	30	475	**GZR30/16S**	420	420
S	30	20	M 42×2.0	M 30×2.0	14.0	52	59.0	50	36	500	**GZR30/20S**	420	420
S	30	25	M 42×2.0	M 36×2.0	18.0	52	60.5	50	46	589	**GZR30/25S**	420	420
S/L	30	28	M 42×2.0	M 36×2.0	22.0	52	58.0	50	41	476	**GZR30S/28L**	250	250
S	38	20	M 52×2.0	M 30×2.0	14.0	52	61.5	60	36	671	**GZR38/20S**	420	420
S	38	25	M 52×2.0	M 36×2.0	18.0	52	63.0	60	46	759	**GZR38/25S**	420	420
S	38	30	M 52×2.0	M 42×2.0	23.0	52	64.5	60	50	767	**GZR38/30S**	420	420
S/L	38	35	M 52×2.0	M 45×2.0	28.0	52	61.5	60	50	662	**GZR38S/35L**	250	250

1) Pressure shown = item deliverable

3) L = light series; 4) S = heavy series

$\frac{\text{PN (bar)}}{10}$ = PN (MPa)

Information on ordering complete fittings or alternative sealing materials see page I7.

*Please add the **suffixes** below according to the material/surface required.

Order code suffixes			
Material	Suffix surface and material	Example	Standard sealing material (no additonal. suffix needed)
Steel	CF	GZR16/12SCF	NBR
Stainless steel	71	GZR16/12S71	VIT

KOVAL

GEO Male stud connector

Male metric thread – O-ring (ISO 6149) / EO 24° cone end

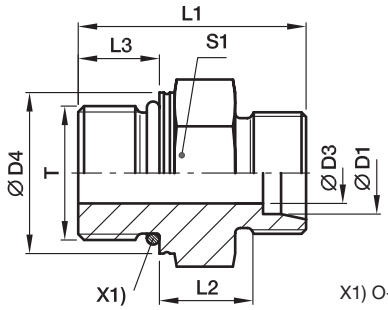

X1) O-ring OR

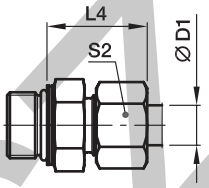

Series	D1	T	D3	D4	L1	L2	L3	L4	S1	S2	Weight g/1 piece	Order code*	PN (bar)[1] Steel	71
LL[2])	04	M 08×1.0	3.0	10.8	20.0	9.5	6.5	19.0	11*	10	8	**GEO04LLMOMD**	100	100
	04	M 10×1.0	3.0	12.8	20.0	9.5	6.5	19.0	13	10	11	**GEO04LLM10X1OMD**	100	
	06	M 10×1.0	4.5	12.8	20.0	8.0	6.5	19.5	13	12	10	**GEO06LLMOMD**	100	
L[3])	06	M 10×1.0	4.5	14.0	25.0	8.5	8.5	23.0	14	14	15	**GEO06LMOMD**	500	315
	08	M 12×1.5	6.0	17.0	28.0	10.0	11.0	25.0	17	17	23	**GEO08LMOMD**	500	315
	10	M 14×1.5	7.5	19.0	29.0	11.0	11.0	26.0	19	19	28	**GEO10LMOMD**	500	315
	12	M 16×1.5	9.0	22.0	31.0	12.5	11.5	27.0	22	22	40	**GEO12LMOMD**	400	315
	15	M 18×1.5	11.0	24.0	33.0	13.5	12.5	29.0	24	27	56	**GEO15LMOMD**	400	315
	18	M 22×1.5	14.0	27.0	35.0	14.5	13.0	31.0	27	32	80	**GEO18LMOMD**	400	315
	22	M 27×2.0	18.0	32.0	40.0	16.5	16.0	33.0	32	36	104	**GEO22LM27X2OMD**	250	160
	28	M 33×2.0	23.0	41.0	41.0	17.5	16.0	34.0	41	41	171	**GEO28LMOMD**	250	160
	35	M 42×2.0	30.0	50.0	44.0	17.5	16.0	39.0	50	50	278	**GEO35LMOMD**	250	160
	42	M 48×2.0	36.0	55.0	47.5	19.0	17.5	42.0	55	60	340	**GEO42LMOMD**	250	160
S[4])	06	M 12×1.5	4.0	17.0	31.0	13.0	11.0	28.0	17	17	29	**GEO06SMOMD**	800	630
	08	M 14×1.5	6.0	19.0	33.0	15.0	11.0	30.0	19	19	41	**GEO08SMOMD**	800	630
	10	M 16×1.5	7.0	22.0	35.0	15.0	12.5	31.0	22	22	55	**GEO10SMOMD**	800	630
	12	M 18×1.5	9.0	24.0	38.5	17.0	14.0	33.0	24	24	73	**GEO12SMOMD**	630	630
	16	M 22×1.5	12.0	27.0	42.0	18.5	15.0	37.0	27	30	102	**GEO16SMOMD**	630	400
	20	M 27×2.0	15.0	32.0	49.5	20.5	18.5	42.0	32	36	169	**GEO20SMOMD**	420	400
	25	M 33×2.0	20.0	41.0	53.5	23.0	18.5	47.0	41	46	274	**GEO25SMOMD**	420	400
	30	M 42×2.0	26.0	50.0	56.0	23.5	19.0	50.0	50	50	412	**GEO30SMOMD**	420	400
	38	M 48×2.0	32.0	55.0	63.5	26.0	21.5	57.0	55	60	580	**GEO38SMOMD**	420	315

[1]) Pressure shown = item deliverable

[2]) LL = very light series; [3]) L = light series; [4]) S = heavy series

$\frac{\text{PN (bar)}}{10}$ = PN (MPa)

Delivery without nut and ring. Information on ordering complete fittings see page I7.

***S1=SW12 in 1.4571**

*Please add the **suffixes** below according to the material/surface required.

Order code suffixes			
Material	Suffix surface and material	Example	Standard sealing material (no additonal. suffix needed)
Steel	CF	GEO16SMOMDCF	NBR
Stainless Steel	71	GEO16SMOMD71	VIT

KOVAL.cz

GE-M-ED Male stud connector

Male metric thread – ED (ISO 9974) / EO 24° cone end

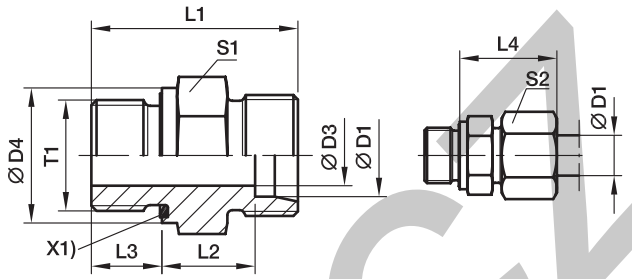

X1) Eolastic-sealing ED

Series	D1	T1	D3	D4	L1	L2	L3	L4	S1	S2	Weight g/1 piece	Order code*	PN (bar)[1] Steel	71
L[3])	06	M 10×1.0	4	14	23.5	8.5	8	23	14	14	13	**GE06LMEDOMD**	500	315
	08	M 12×1.5	6	17	29.0	10.0	12	25	17	17	22	**GE08LMEDOMD**	500	315
	10	M 14×1.5	7	19	30.0	11.0	12	26	19	19	29	**GE10LMEDOMD**	500	315
	10	M 12×1.5	6	17	30.0	11.0	12	26	17	19	23	**GE10LM12X1.5EDOMD**	315	315
	10	M 16×1.5	8	22	31.5	12.5	12	27	22	19	40	**GE10LM16X1.5EDOMD**	420	315
	10	M 18×1.5	8	24	31.5	12.5	12	27	24	19	50	**GE10LM18X1.5EDOMD**	400	315
	10	M 22×1.5	8	27	35.0	14.0	14	29	27	19	80	**GE10LM22X1.5EDOMD**	400	315
	12	M 16×1.5	9	22	31.5	12.5	12	27	22	22	40	**GE12LMEDOMD**	400	315
	12	M 14×1.5	7	19	30.0	11.0	12	26	19	22	30	**GE12LM14X1.5EDOMD**	400	315
	12	M 18×1.5	10	24	31.5	12.5	12	27	24	22	47	**GE12LM18X1.5EDOMD**	400	315
	12	M 22×1.5	10	27	35.0	14.0	14	29	27	22	75	**GE12LM22X1.5EDOMD**	400	315
	15	M 18×1.5	11	24	32.5	13.5	12	29	24	27	51	**GE15LMEDOMD**	400	315
	15	M 16×1.5	9	22	32.0	13.0	12	28	24	27	64	**GE15LM16X1.5EDOMD**	400	315
	15	M 22×1.5	12	27	36.0	15.0	14	30	27	27	77	**GE15LM22X1.5EDOMD**	400	315
	18	M 22×1.5	14	27	36.0	14.5	14	31	27	32	74	**GE18LMEDOMD**	400	315
	18	M 18×1.5	11	24	33.5	14.0	12	30	27	32	68	**GE18LM18X1.5EDOMD**	400	315
	22	M 26×1.5	18	32	40.0	16.5	16	33	32	36	103	**GE22LMEDOMD**	250	160
	22	M 22×1.5	14	32	38.0	16.5	14	33	32	36	97	**GE22LM22X1.5EDOMD**	250	160
	28	M 33×2.0	23	40	43.0	17.5	18	34	41	41	168	**GE28LMEDOMD**	250	160
	35	M 42×2.0	30	50	48.0	17.5	20	39	50	50	281	**GE35LMEDOMD**	250	160
	42	M 48×2.0	36	55	52.0	19.0	22	42	55	60	356	**GE42LMEDOMD**	250	160
S[4])	06	M 12×1.5	4	17	32.0	13.0	12	28	17	17	30	**GE06SMEDOMD**	800	630
	08	M 14×1.5	5	19	34.0	15.0	12	30	19	19	42	**GE08SMEDOMD**	800	630
	10	M 16×1.5	7	22	34.5	15.0	12	31	22	22	54	**GE10SMEDOMD**	800	630
	12	M 18×1.5	8	24	36.5	17.0	12	33	24	24	71	**GE12SMEDOMD**	630	630
	12	M 14×1.5	5	19	36.0	16.5	12	33	22	24	60	**GE12SM14X1.5EDOMD**	630	630
	12	M 22×1.5	8	27	39.0	17.5	14	34	27	24	102	**GE12SM22X1.5EDOMD**	630	400
	16	M 22×1.5	12	27	41.0	18.5	14	37	27	30	95	**GE16SMEDOMD**	630	400
	16	M 18×1.5	8	24	38.5	18.0	12	36	27	30	88	**GE16SM18X1.5EDOMD**	630	400
	20	M 27×2.0	16	32	47.0	20.5	16	42	32	36	150	**GE20SMEDOMD**	420	400
	25	M 33×2.0	20	40	53.0	23.0	18	47	41	46	264	**GE25SMEDOMD**	420	400
	30	M 42×2.0	25	50	57.0	23.5	20	50	50	50	422	**GE30SMEDOMD**	420	400
	38	M 48×2.0	32	55	64.0	26.0	22	57	55	60	569	**GE38SMEDOMD**	420	315

[1]) Pressure shown = item deliverable

[3]) L = light series; [4]) S = heavy series

$\frac{\text{PN (bar)}}{10}$ = PN (MPa)

Delivery without nut and ring. Information on ordering complete fittings or alternative sealing materials see page I7.

*Please add the below according to the material/surface required.

Order code suffixes			
Material	Suffix surface and material	Example	Standard sealing material (no additonal. suffix needed)
Steel	CF	GE16SMEDOMDCF	NBR
Stainless Steel	71	GE16SMEDOMD71	VIT

GE-R-ED Male stud connector

Male BSPP thread – ED-seal (ISO 1179) / EO 24° cone end

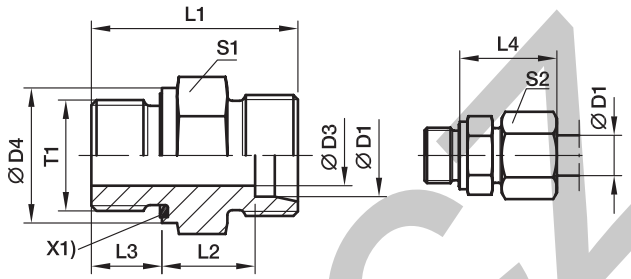

X1) Eolastic-sealing ED

Series	D1	T1	D3	D4	L1	L2	L3	L4	S1	S2	Weight g/1 piece	Order code*	PN (bar)[1] Steel	71	MS
LL[2])	04	G 1/8 A	3	14	20.0	9.5	6.5	19	14	10	10	**GE04LLREDOMD**	100	100	63
	06	G 1/8 A	4	14	20.0	8.0	6.5	20	14	12	11	**GE06LLREDOMD**	100	100	63
L[3])	06	G 1/8 A	4	14	23.5	8.5	8.0	23	14	14	13	**GE06LREDOMD**	500	315	200
	06	G 1/4 A	4	19	29.0	10.0	12.0	25	19	14	28	**GE06LR1/4EDOMD**	500	315	200
	06	G 3/8 A	4	22	30.5	11.5	12.0	26	22	14	44	**GE06LR3/8EDOMD**	420	315	200
	06	G 1/2 A	4	27	33.0	12.0	14.0	27	27	14	61	**GE06LR1/2EDOMD**	400	315	200
	08	G 1/4 A	6	19	29.0	10.0	12.0	25	19	17	27	**GE08LREDOMD**	500	315	200
	08	G 1/8 A	4	14	24.5	9.5	8.0	24	14	17	16	**GE08LR1/8EDOMD**	500	315	200
	08	G 3/8 A	6	22	30.5	11.5	12.0	26	22	17	45	**GE08LR3/8EDOMD**	420	315	200
	08	G 1/2 A	6	27	33.0	12.0	14.0	27	27	17	74	**GE08LR1/2EDOMD**	400	315	200
	10	G 1/4 A	6	19	30.0	11.0	12.0	26	19	19	29	**GE10LREDOMD**	500	315	200
	10	G 1/8 A	4	14	25.5	10.5	8.0	25	17	19	21	**GE10LR1/8EDOMD**	500	315	200
	10	G 3/8 A	8	22	31.5	12.5	12.0	27	22	19	43	**GE10LR3/8EDOMD**	420	315	200
	10	G 1/2 A	8	27	34.0	13.0	14.0	28	27	19	71	**GE10LR1/2EDOMD**	400	315	200
	12	G 3/8 A	9	22	31.5	12.5	12.0	27	22	22	41	**GE12LREDOMD**	420	315	200
	12	G 1/8 A	4	14	26.5	11.5	8.0	26	19	22	26	**GE12LR1/8EDOMD**	420	315	200
	12	G 1/4 A	6	19	31.0	12.0	12.0	27	19	22	31	**GE12LR1/4EDOMD**	400	315	200
	12	G 1/2 A	10	27	34.0	13.0	14.0	28	27	22	67	**GE12LR1/2EDOMD**	400	315	200
	12	G 3/4 A	10	32	37.0	14.0	16.0	29	32	22	118	**GE12LR3/4EDOMD**	250	160	100
	15	G 1/2 A	11	27	35.0	14.0	14.0	29	27	27	72	**GE15LREDOMD**	400	315	200
	15	G 3/8 A	9	22	32.5	13.5	12.0	29	24	27	54	**GE15LR3/8EDOMD**	400	315	200
	15	G 3/4 A	12	32	38.0	15.0	16.0	30	32	27	116	**GE15LR3/4EDOMD**	250	160	100
	18	G 1/2 A	14	27	36.0	14.5	14.0	31	27	32	71	**GE18LREDOMD**	400	315	200
	18	G 3/8 A	9	22	33.5	14.0	12.0	30	27	32	66	**GE18LR3/8EDOMD**	400	315	200
	18	G 3/4 A	15	32	38.0	14.5	16.0	31	32	32	110	**GE18LR3/4EDOMD**	250	160	100
	22	G 3/4 A	18	32	40.0	16.5	16.0	33	32	36	102	**GE22LREDOMD**	250	160	100
	22	G 1/2 A	14	27	38.0	16.5	14.0	33	32	36	91	**GE22LR1/2EDOMD**	250	160	100
	22	G 1 A	19	40	43.0	17.5	18.0	34	41	36	189	**GE22LR1EDOMD**	250	160	100
	28	G 1 A	23	40	43.0	17.5	18.0	34	41	41	170	**GE28LREDOMD**	250	160	100
	28	G 3/4 A	18	32	41.0	17.5	16.0	34	41	41	159	**GE28LR3/4EDOMD**	250	160	100
	28	G 1 1/4 A	24	50	46.0	18.5	20.0	35	50	41	316	**GE28LR11/4EDOMD**	250	160	100
	35	G 1 1/4 A	30	50	48.0	17.5	20.0	39	50	50	272	**GE35LREDOMD**	250	160	100
	35	G 1 A	23	40	46.0	17.5	18.0	39	46	50	226	**GE35LR1EDOMD**	250	160	100
	35	G 1 1/2 A	30	55	52.0	19.5	22.0	41	55	50	423	**GE35LR11/2EDOMD**	250	160	100
	42	G 1 1/2 A	36	55	52.0	19.0	22.0	42	55	60	343	**GE42LREDOMD**	250	160	100
	42	G 1 A	23	40	48.0	19.0	18.0	42	55	60	324	**GE42LR1EDOMD**	250	160	100
	42	G 1 1/4 A	30	50	50.0	19.0	20.0	42	55	60	348	**GE42LR11/4EDOMD**	250	160	100

[1]) Pressure shown = item deliverable

[2]) LL = very light series; [3]) L = light series

$\frac{\text{PN (bar)}}{10}$ = PN (MPa)

Delivery without nut and ring. Information on ordering complete fittings or alternative sealing materials see page I7.

*Please add the **suffixes** below according to the material/surface required.

Order code suffixes			
Material	Suffix surface and material	Example	Standard sealing material (no additonal. suffix needed)
Steel	CF	GE18LREDOMDCF	NBR
Stainless Steel	71	GE18LREDOMD71	VIT
Brass	MS	GE18LREDOMDMS	NBR

GE-R-ED Male stud connector

Male BSPP thread – ED-seal (ISO 1179) / EO 24° cone end

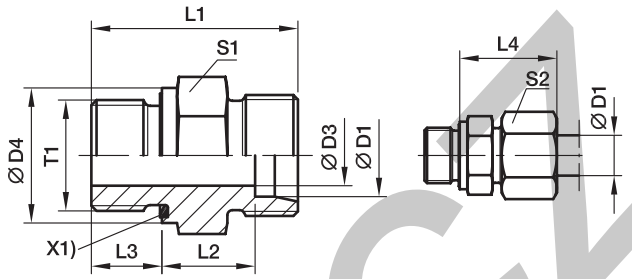

X1) Eolastic-sealing ED

Series	D1	T1	D3	D4	L1	L2	L3	L4	S1	S2	Weight g/1 piece	Order code*	PN (bar)[1] Steel	71	MS
S[4])	06	G 1/4 A	4	19	32.0	13.0	12	28	19	17	35	**GE06SREDOMD**	800	630	400
	06	G 1/8 A	4	14	27.5	12.5	8	27	14	17	21	**GE06SR1/8EDOMD**	500	315	
	06	G 3/8 A	4	22	34.5	15.5	12	30	22	17	52	**GE06SR3/8EDOMD**	630	630	
	06	G 1/2 A	4	27	39.0	18.0	14	33	27	17	83	**GE06SR1/2EDOMD**	630	400	
	08	G 1/4 A	5	19	34.0	15.0	12	30	19	19	41	**GE08SREDOMD**	800	630	400
	08	G 3/8 A	5	22	34.5	15.5	12	30	22	19	57	**GE08SR3/8EDOMD**	800	630	
	08	G 1/2 A	5	27	39.0	18.0	14	33	27	19	89	**GE08SR1/2EDOMD**	630	400	
	10	G 3/8 A	7	22	34.5	15.0	12	31	22	22	55	**GE10SREDOMD**	800	630	400
	10	G 1/4 A	5	19	34.0	14.5	12	31	19	22	42	**GE10SR1/4EDOMD**	800	630	
	10	G 1/2 A	7	27	39.0	17.5	14	34	27	22	97	**GE10SR1/2EDOMD**	630	630	
	12	G 3/8 A	8	22	36.5	17.0	12	33	22	24	62	**GE12SREDOMD**	630	630	400
	12	G 1/4 A	5	19	36.0	16.5	12	33	22	24	61	**GE12SR1/4EDOMD**	630	630	
	12	G 1/2 A	8	27	39.0	17.5	14	34	27	24	99	**GE12SR1/2EDOMD**	630	630	
	16	G 1/2 A	12	27	41.0	18.5	14	37	27	30	91	**GE16SREDOMD**	630	400	250
	16	G 3/8 A	8	22	38.5	18.0	12	36	27	30	83	**GE16SR3/8EDOMD**	630	400	
	16	G 3/4 A	12	32	45.0	20.5	16	39	32	30	152	**GE16SR3/4EDOMD**	420	400	
	20	G 3/4 A	16	32	47.0	20.5	16	42	32	36	149	**GE20SREDOMD**	420	400	250
	20	G 1/2 A	12	27	45.0	20.5	14	42	32	36	142	**GE20SR1/2EDOMD**	420	400	
	20	G 1 A	16	40	51.0	22.5	18	44	41	36	265	**GE20SR1EDOMD**	420	400	
	20	G 1 1/4 A	16	50	53.0	22.5	20	44	50	36	404	**GE20SR11/4EDOMD**	420	400	
	25	G 1 A	20	40	53.0	23.0	18	47	41	46	266	**GE25SREDOMD**	420	400	250
	25	G 1/2 A	12	27	49.0	23.0	14	47	41	46	228	**GE25SR1/2EDOMD**	420	400	
	25	G 3/4 A	16	32	51.0	23.0	16	47	41	46	255	**GE25SR3/4EDOMD**	420	400	
	25	G 1 1/4 A	20	50	55.0	23.0	20	47	50	46	411	**GE25SR11/4EDOMD**	420	400	
	25	G 1 1/2 A	20	55	60.0	26.0	22	50	55	46	549	**GE25SR11/2EDOMD**	315	315	
	30	G 1 1/4 A	25	50	57.0	23.5	20	50	50	50	418	**GE30SREDOMD**	420	400	250
	30	G 1 A	20	40	55.0	23.5	18	50	46	50	344	**GE30SR1EDOMD**	420	400	
	30	G 1 1/2 A	25	55	62.0	26.5	22	53	55	50	530	**GE30SR11/2EDOMD**	315	315	
	38	G 1 1/2 A	32	55	64.0	26.0	22	57	55	60	563	**GE38SREDOMD**	420	315	200
	38	G 1 1/4 A	25	50	62.0	26.0	20	57	55	60	575	**GE38SR11/4EDOMD**	420	315	

[1]) Pressure shown = item deliverable

[4]) S = heavy series

$\frac{PN\ (bar)}{10} = PN\ (MPa)$

Delivery without nut and ring. Information on ordering complete fittings or alternative sealing materials see page I7.

*Please add the **suffixes** below according to the material/surface required

Order code suffixes			
Material	Suffix surface and material	Example	Standard sealing material (no additonal. suffix needed)
Steel	CF	GE16SREDOMDCF	NBR
Stainless Steel	71	GE16SREDOMD71	VIT
Brass	MS	GE16SREDOMDMS	NBR

KOVAX.CZ

GE-R Male stud connector

Male BSPP thread – metal sealing edge (ISO 1179) / EO 24° cone end

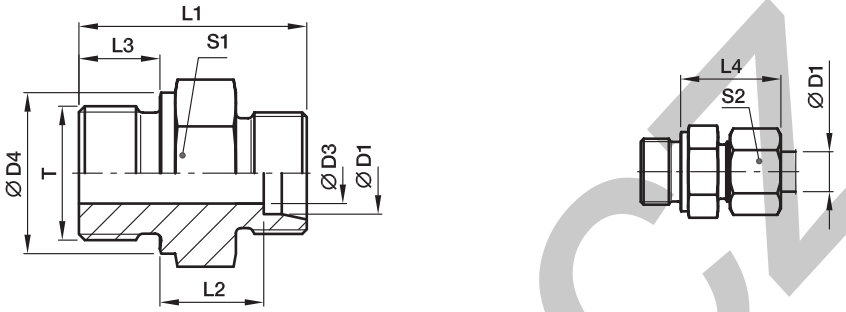

Series	D1	T	D3	D4	L1	L2	L3	L4	S1	S2	Weight g/1 piece	Order code*	PN (bar)[1] Steel	71	MS
L[3]	06	G 1/8 A	4	14	23.5	8.5	8	23.0	14	14	14	**GE06LR**	315	315	200
	06	G 1/4 A	4	18	29.0	10.0	12	25.0	19	14	60	**GE06LR1/4**	315	315	200
	06	G 3/8 A	4	22	30.5	11.5	12	26.0	22	14	45	**GE06LR3/8**	315	315	200
	06	G 1/2 A	4	26	33.0	12.0	14	27.0	27	14	60	**GE06LR1/2**	315	315	
	08	G 1/4 A	6	18	29.0	10.0	12	25.0	19	17	26	**GE08LR**	315	315	200
	08	G 1/8 A	4	14	24.5	8.5	8	23.0	14	17	16	**GE08LR1/8**	315	315	
	08	G 3/8 A	6	22	30.5	11.5	12	26.0	22	17	44	**GE08LR3/8**	315	315	200
	08	G 1/2 A	6	26	33.0	12.0	14	27.0	27	17	74	**GE08LR1/2**	315	315	200
	10	G 1/4 A	6	18	30.0	11.0	12	26.0	19	19	31	**GE10LR**	315	315	200
	10	G 1/8 A	4	14	25.5	10.5	8	25.0	17	19	21	**GE10LR1/8**	315	315	
	10	G 3/8 A	8	22	31.5	12.5	12	27.0	22	19	44	**GE10LR3/8**	315	315	200
	10	G 1/2 A	8	26	34.0	13.0	14	28.0	27	19	72	**GE10LR1/2**	315	315	200
	12	G 3/8 A	9	22	31.5	12.5	12	27.0	22	22	43	**GE12LR**	315	315	200
	12	G 1/8 A	4	14	26.5	11.5	8	26.0	19	22	27	**GE12LR1/8**	315	315	
	12	G 1/4 A	6	18	31.0	12.0	12	27.0	19	22	32	**GE12LR1/4**	315	315	200
	12	G 1/2 A	10	26	34.0	13.0	14	28.0	27	22	67	**GE12LR1/2**	315	315	200
	12	G 3/4 A	10	32	37.0	14.0	16	29.0	32	22	120	**GE12LR3/4**	315	315	
	15	G 1/2 A	11	26	35.0	14.0	14	29.0	27	27	72	**GE15LR**	250	250	160
	15	G 3/8 A	9	22	32.5	13.5	12	29.0	24	27	56	**GE15LR3/8**	250	250	160
	15	G 3/4 A	12	32	38.0	15.0	16	30.0	32	27	118	**GE15LR3/4**	250	250	
	18	G 1/2 A	14	26	36.0	14.5	14	31.0	27	32	72	**GE18LR**	250	250	160
	18	G 3/8 A	9	22	33.5	14.0	12	29.5	27	32	69	**GE18LR3/8**	250	250	
	18	G 3/4 A	15	32	38.0	14.5	16	30.0	32	32	112	**GE18LR3/4**	250	250	
	22	G 3/4 A	18	32	40.0	16.5	16	33.0	32	36	103	**GE22LR**	160	160	100
	22	G 1/2 A	14	26	38.0	16.5	14	33.0	32	36	91	**GE22LR1/2**	160	160	100
	22	G 1 A	19	39	43.0	17.5	18	33.5	41	36	184	**GE22LR1**	160	160	
	28	G 1 A	23	39	43.0	17.5	18	34.0	41	41	168	**GE28LR**	160	160	100
	28	G 1/2 A	14	26	39.0	17.5	14	34.0	41	41	141	**GE28LR1/2**	160	160	
	28	G 3/4 A	18	32	41.0	17.5	16	34.0	41	41	156	**GE28LR3/4**	160	160	
	28	G 1 1/4 A	24	50	46.0	18.3	20	35.0	50	41	314	**GE28LR11/4**	160	160	
	35	G 1 1/4 A	30	49	48.0	17.5	20	39.0	50	50	276	**GE35LR**	160	160	100
	35	G 1/2 A	14	26	42.0	17.5	14	39.0	46	50	194	**GE35LR1/2**	160	160	
	35	G 3/4 A	18	32	44.0	17.5	16	39.0	46	50	202	**GE35LR3/4**	160	160	
	35	G 1 A	23	39	46.0	17.5	18	39.0	46	50	234	**GE35LR1**	160	160	
	35	G 1 1/2 A	30	55	52.0	19.5	22	41.0	55	50	355	**GE35LR11/2**	160	160	
	42	G 1 1/2 A	36	55	52.0	19.0	22	42.0	55	60	349	**GE42LR**	160	160	100
	42	G 1 A	23	39	48.0	19.0	18	42.0	55	60	327	**GE42LR1**	160	160	
	42	G 1 1/4 A	30	49	50.0	19.0	20	42.0	55	60	336	**GE42LR11/4**	160	160	

[1]) Pressure shown = item deliverable

[3]) L = light series

$\frac{PN\ (bar)}{10}$ = PN (MPa)

Delivery without nut and ring. Information on ordering complete fittings see page I7.

*Please add the **suffixes** below according to the material/surface required.

Order code suffixes		
Material	Suffix surface and material	Example
Steel	CFX	GE18LRCFX
Stainless Steel	71X	GE18LR71X
Brass	MSX	GE18LRMSX

GE-R Male stud connector

Male BSPP thread – metal sealing edge (ISO 1179) / EO 24° cone end

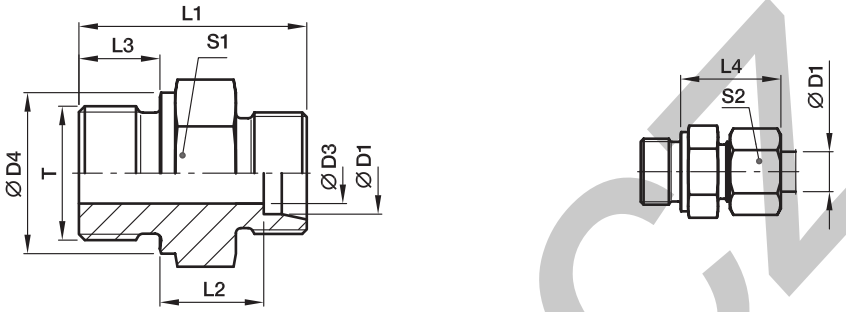

Series	D1	T	D3	D4	L1	L2	L3	L4	S1	S2	Weight g/1 piece	Order code*	PN (bar)[1] Steel	71	MS
S[4])	06	G 1/4 A	4	18	32.0	13.0	12	28	19	17	35	**GE06SR**	400	400	250
	06	G 1/8 A	3	14	27.5	12.5	8	27	14	17	22	**GE06SR1/8**	400	400	
	06	G 3/8 A	4	22	34.5	15.5	12	30	22	17	57	**GE06SR3/8**	400	400	
	06	G 1/2 A	4	26	39.0	18.0	14	33	27	17	83	**GE06SR1/2**	400	400	
	08	G 1/4 A	5	18	34.0	15.0	12	30	19	19	41	**GE08SR**	400	400	250
	08	G 3/8 A	5	22	34.5	15.5	12	30	22	19	59	**GE08SR3/8**	400	400	
	08	G 1/2 A	5	26	39.0	18.0	14	33	27	19	100	**GE08SR1/2**	400	400	
	10	G 3/8 A	7	22	34.5	15.0	12	31	22	22	56	**GE10SR**	400	400	250
	10	G 1/4 A	5	18	34.0	14.5	12	31	19	22	43	**GE10SR1/4**	400	400	
	10	G 1/2 A	7	26	39.0	17.5	14	34	27	22	97	**GE10SR1/2**	400	400	
	12	G 3/8 A	8	22	36.5	17.0	12	33	22	24	62	**GE12SR**	400	400	250
	12	G 1/4 A	5	18	36.0	16.5	12	33	22	24	57	**GE12SR1/4**	400	400	
	12	G 1/2 A	8	26	39.0	17.5	14	34	27	24	57	**GE12SR1/2**	400	400	
	16	G 1/2 A	12	26	41.0	18.5	14	37	27	30	92	**GE16SR**	400	400	250
	16	G 3/8 A	8	22	38.5	18.0	12	36	27	30	83	**GE16SR3/8**	400	400	
	16	G 3/4 A	12	32	45.0	20.5	16	39	32	30	157	**GE16SR3/4**	400	400	
	20	G 3/4 A	16	32	47.0	20.5	16	42	32	36	151	**GE20SR**	400	400	250
	20	G 1/2 A	12	26	45.0	20.5	14	42	32	36	142	**GE20SR1/2**	400	400	
	20	G 1 A	16	39	51.0	22.5	18	44	41	36	273	**GE20SR1**	250	250	
	20	G 1 1/4 A	16	49	53.0	22.5	20	44	50	36	387	**GE20SR11/4**	160	160	
	25	G 1 A	20	39	53.0	23.0	18	47	41	46	267	**GE25SR**	250	250	160
	25	G 3/4 A	16	32	51.0	23.0	16	47	41	46	245	**GE25SR3/4**	250	250	
	25	G 1 1/4 A	20	49	55.0	23.0	20	47	50	46	422	**GE25SR11/4**	160	160	
	30	G 1 1/4 A	25	49	57.0	23.5	20	50	50	50	422	**GE30SR**	160	160	100
	30	G 1 A	20	39	55.0	23.5	18	50	46	50	337	**GE30SR1**	160	160	
	38	G 1 1/2 A	32	55	64.0	26.0	22	57	55	60	560	**GE38SR**	160	160	100
	38	G 1 1/4 A	25	49	62.0	26.0	20	57	55	60	578	**GE38SR11/4**	160	160	

[1]) Pressure shown = item deliverable

[4]) S = heavy series

$\frac{\text{PN (bar)}}{10}$ = PN (MPa)

Delivery without nut and ring. Information on ordering complete fittings see page I7.

*Please add the **suffixes** below according to the material/surface required.

Order code suffixes		
Material	Suffix surface and material	Example
Steel	CFX	GE16SRCFX
Stainless Steel	71X	GE16SR71X
Brass	MSX	GE16SRMSX

GE-R(KEG) Male stud connector

Male short BSPT taper thread (DIN 3852-2, type C) / EO 24° cone end

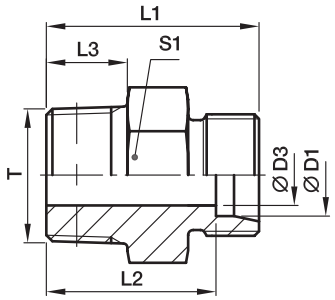

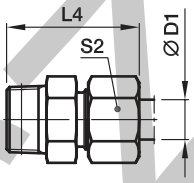

Series	D1	T	D3	L1	L2	L3	L4	S1	S2	Weight g/1 piece	Order code*	PN (bar)[1] Steel	71	MS
LL[2])	04	R 1/8 tap.	3.0	20	16.0	8	26	11*	10	8	**GE04LLR**	100	100	63
	06	R 1/8 tap.	4.5	20	14.5	8	26	11*	12	8	**GE06LLR**	100	100	63
	08	R 1/8 tap.	6.0	22	16.5	8	28	12	14	10	**GE08LLR**	100	100	63
	08	R 1/4 tap.	6.0	26	20.5	12	32	14	14	18	**GE08LLR1/4**	100	100	63
	10	R 1/4 tap.	8.0	26	20.5	12	32	14	17	15	**GE10LLR**	100		63
	12	R 1/4 tap.	8.0	26	20.0	12	32	17	19	18	**GE12LLR**	100		63
	12	R 3/8 tap.	10.0	26	20.0	12	32	17	19	23	**GE12LLR3/8**	100		63
L[3])	06	R 1/8 tap.	4.0	22	15.0	8	30	12	14	11	**GE06LR1/8KEG**	315	315	
	06	R 1/4 tap.	4.0	27	20.0	12	35	17	14	24	**GE06LR1/4KEG**	315	315	200
	08	R 1/8 tap.	4.0	23	16.0	8	31	14	17	15	**GE08LR1/8KEG**	315	315	200
	08	R 1/4 tap.	6.0	27	20.0	12	35	17	17	22	**GE08LR1/4KEG**	315	315	
	10	R 1/4 tap.	7.0	28	21.0	12	36	17	19	24	**GE10LR1/4KEG**	315	315	
	12	R 1/4 tap.	7.0	29	22.0	12	37	19	22	53	**GE12LR1/4KEG**	315	315	200
	12	R 3/8 tap.	9.0	29	22.0	12	37	19	22	33	**GE12LR3/8KEG**	315	315	
	12	R 1/2 tap.	10.0	31	24.0	14	39	24	22	53	**GE12LR1/2KEG**	315	315	200
	15	R 3/8 tap.	9.0	30	23.0	12	38	24	27	49	**GE15LR3/8KEG**	315	315	200
	15	R 1/2 tap.	11.0	32	25.0	14	40	24	27	59	**GE15LR1/2KEG**	315	315	
	18	R 1/2 tap.	14.0	33	25.5	14	42	27	32	64	**GE18LR1/2KEG**	315	315	
	22	R 3/4 tap.	17.0	37	29.5	16	46	32	36	99	**GE22LR3/4KEG**	160	160	
	28	R 1 tap.	23.0	40	32.5	18	49	41	41	154	**GE28LR1KEG**	160	160	
	35	R 1 1/4 tap.	30.0	45	34.5	20	56	46	50	238	**GE35LR11/4KEG**	160	160	
	42	R 1 1/2 tap.	36.0	49	38.0	22	61	55	60	335	**GE42LR11/2KEG**	160	160	

[1]) Pressure shown = item deliverable

[2]) LL = very light series; [3]) L = light series

$\frac{\text{PN (bar)}}{10}$ = PN (MPa)

Delivery without nut and ring. Information on ordering complete fittings see page I7.

*) S1 = 12 for 1.4571

*Please add the **suffixes** below according to the material/surface required.

Order code suffixes		
Material	Suffix surface and material	Example
Steel	CFX	GE06LR1/4KEGCFX
Stainless Steel	71X	GE06LR1/4KEG71X
Brass	MSX	GE06LR1/4KEGMSX

KOVAK.cz

GE-M Male stud connector

Male metric thread – metal sealing edge (ISO 9974) / EO 24° cone end

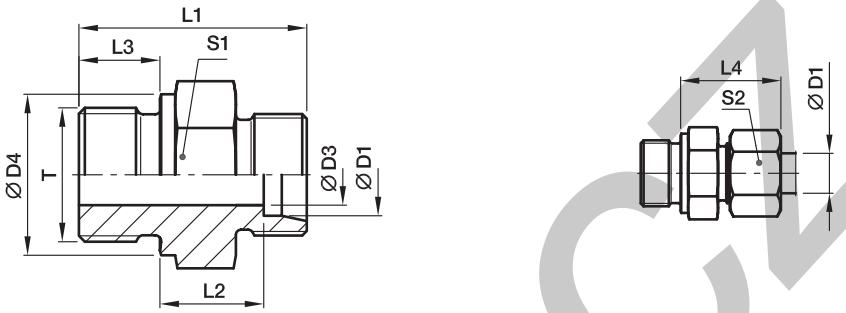

Series	D1	T	D3	D4	L1	L2	L3	L4	S1	S2	Weight g/1 piece	Order code*	PN (bar)[1] Steel	71	MS
L[3])	06	M 10×1.0	4	14	23.5	8.5	8	23	14	14	13	**GE06LM**	315	315	200
	08	M 12×1.5	6	17	29.0	10.0	12	25	17	17	22	**GE08LM**	315	315	200
	10	M 14×1.5	7	19	30.0	11.0	12	26	19	19	31	**GE10LM**	315	315	200
	10	M 10×1.0	4	14	25.5	10.5	8	25	17	19	20	**GE10LM10X1**	315	315	
	10	M 12×1.5	6	17	30.0	11.0	12	26	17	19	25	**GE10LM12X1.5**	315	315	
	10	M 16×1.5	8	21	31.5	12.0	12	27	22	19	41	**GE10LM16X1.5**	315	315	
	10	M 18×1.5	8	23	31.5	12.5	12	27	24	19	50	**GE10LM18X1.5**	315	315	
	10	M 22×1.5	8	27	35.0	14.0	14	29	27	19	72	**GE10LM22X1.5**	315	315	
	12	M 14×1.5	7	19	30.0	11.0	12	26	19	22	30	**GE12LM14X1.5**	315	315	
	12	M 16×1.5	9	21	31.5	12.5	12	27	22	22	40	**GE12LM**	315	315	
	12	M 18×1.5	10	23	31.5	12.5	12	27	24	22	47	**GE12LM18X1.5**	315	315	
	12	M 22×1.5	10	27	35.0	14.0	14	29	27	22	76	**GE12LM22X1.5**	315	315	
	15	M 16×1.5	9	21	32.0	13.0	12	28	24	27	50	**GE15LM16X1.5**	250	250	
	15	M 18×1.5	11	23	32.5	13.5	12	29	24	27	52	**GE15LM**	250	250	160
	15	M 22×1.5	12	27	36.0	15.0	14	30	27	27	77	**GE15LM22X1.5**	250	250	
	18	M 18×1.5	11	23	33.5	14.0	12	30	27	32	68	**GE18LM18X1.5**	250	250	
	18	M 22×1.5	14	27	36.0	14.5	14	31	27	32	77	**GE18LM**	250	250	160
	22	M 22×1.5	14	27	38.0	16.5	14	33	32	36	92	**GE22LM22X1.5**	160	160	
	22	M 26×1.5	18	31	40.0	16.5	16	33	32	36	102	**GE22LM**	160	160	100
	28	M 33×2.0	23	39	43.0	17.5	18	34	41	41	168	**GE28LM**	160	160	100
	35	M 42×2.0	30	49	48.0	17.5	20	39	50	50	280	**GE35LM**	160	160	100
	42	M 48×2.0	36	55	52.0	19.0	22	42	55	60	354	**GE42LM**	160	160	100
S[4])	06	M 12×1.5	4	17	32.0	13.0	12	28	17	17	30	**GE06SM**	400	400	250
	06	M 14×1.5	4	19	34.0	15.0	12	30	19	17	42	**GE06SM14X1.5**	400	400	
	08	M 14×1.5	5	19	34.0	15.0	12	30	19	19	43	**GE08SM**	400	400	250
	10	M 16×1.5	7	21	34.5	15.0	12	31	22	22	54	**GE10SM**	400	400	250
	12	M 18×1.5	8	23	36.5	17.0	12	33	24	24	72	**GE12SM**	400	400	250
	12	M 14×1.5	5	19	36.0	16.5	12	33	22	24	60	**GE12SM14X1.5**	400	400	
	12	M 22×1.5	8	27	39.0	17.5	14	34	27	24	103	**GE12SM22X1.5**	400	400	
	16	M 18×1.5	8	23	38.5	18.0	12	36	27	30	88	**GE16SM18X1.5**	400	400	
	16	M 22×1.5	12	27	41.0	18.5	14	37	27	30	97	**GE16SM**	400	400	250
	20	M 27×2.0	16	32	47.0	20.5	16	42	32	36	155	**GE20SM**	400	400	250
	25	M 33×2.0	20	39	53.0	23.0	18	47	41	46	268	**GE25SM**	250	250	160
	30	M 42×2.0	25	49	57.0	23.5	20	50	50	50	421	**GE30SM**	160	160	100
	38	M 48×2.0	32	55	64.0	26.0	22	57	55	60	568	**GE38SM**	160	160	100

[1]) Pressure shown = item deliverable

[3]) L = light series; [4]) S = heavy series

$\frac{\text{PN (bar)}}{10}$ = PN (MPa)

Delivery without nut and ring. Information on ordering complete fittings see page I7.

*Please add the **suffixes** below according to the material/surface required.

Order code suffixes		
Material	Suffix surface and material	Example
Steel	CFX	GE16SMCFX
Stainless Steel	71X	GE16SM71X
Brass	MSX	GE16SMMSX

GE-M(KEG) Male stud connector

Male short metric taper thread (DIN 3852-1, type C) / EO 24° cone end

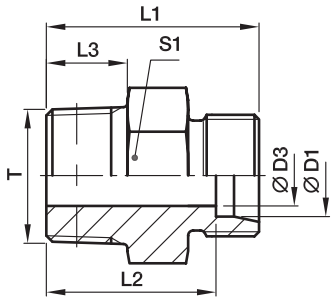

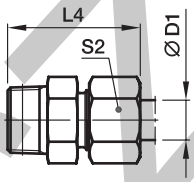

Series	D1	T	D3	L1	L2	L3	L4	S1	S2	Weight g/1 piece	Order code*	PN (bar)[1] Steel	71	MS
LL[2])	04	M 06×1.0 tap.	2.0	20	16.0	8	26	9*	10	5	**GE04LLM6X1KEG**	100		
	04	M 08×1.0 tap.	3.0	20	16.0	8	26	10*	10	7	**GE04LLM**	100	100	63
	06	M 10×1.0 tap.	4.5	20	14.5	8	26	11*	12	9	**GE06LLM**	100	100	63
	06	M 08×1.0 tap.	3.5	20	14.5	8	26	11*	12	9	**GE06LLM8X1KEG**	100		
	08	M 10×1.0 tap.	6.0	22	16.5	8	28	12*	14	10	**GE08LLM**	100	100	63

[1]) Pressure shown = item deliverable

[2]) LL = very light series

$\frac{\text{PN (bar)}}{10}$ = PN (MPa)

Delivery without nut and ring. Information on ordering complete fittings see page I7.

***S1=SW12 in 1.4571**

*Please add the **suffixes** below according to the material/surface required.

Order code suffixes		
Material	Suffix surface and material	Example
Steel	CFX	GE06LLMCFX
Stainless Steel	71X	GE06LLM71X
Brass	MSX	GE06LLMMSX

KOVAZ.CZ

GE-UNF/UN Male stud connector

Male UNF/UN thread – O-ring (ISO 11926) / EO 24° cone end

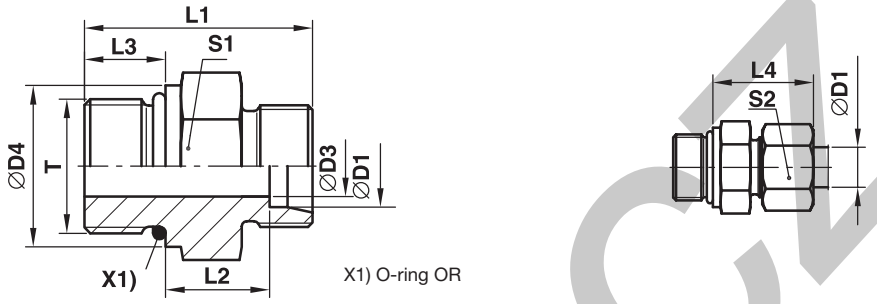

X1) O-ring OR

Series	D1	T	D3	D4	L1	L2	L3	L4	S1	S2	Weight g/1 piece	Order code*	PN (bar)[1] Steel	71
L[3])	08	7/16-20UNF-2A	5.0	–	26	10.0	9.0	25	17	17	21	**GE08L7/16UNFOMD**	315	315
	10	7/16-20UNF-2A	5.0	–	27	11.0	9.0	26	17	19	23	**GE10L7/16UNFOMD**	315	315
	12	9/16-18UNF-2A	7.0	–	28	11.0	10.0	26	19	22	32	**GE12L9/16UNFOMD**	315	315
	12	3/4-16UNF-2A	10.0	–	31	13.0	11.0	28	24	22	52	**GE12L3/4UNFOMD**	315	315
	12	7/8-14UNF-2A	10.0	–	34	14.3	12.7	29	27	22	77	**GE12L7/8UNFOMD**	315	315
	15	3/4-16UNF-2A	11.0	–	32	14.0	11.0	29	24	27	57	**GE15L3/4UNFOMD**	315	315
	15	7/8-14UNF-2A	12.0	–	35	15.3	12.7	30	27	27	81	**GE15L7/8UNFOMD**	315	315
	18	3/4-16UNF-2A	11.0	23.9	33	14.5	11.0	31	27	32	68	**GE18L3/4UNFOMD**	315	315
	18	7/8-14UNF-2A	14.0	–	35	14.8	12.7	31	27	32	72	**GE18L7/8UNFOMD**	315	315
	22	7/8-14UNF-2A	14.0	26.9	37	16.8	12.7	33	32	36	94	**GE22L7/8UNFOMD**	160	160
	22	1 1/16-12UN-2A	18.0	–	39	16.5	15.0	33	32	36	103	**GE22L11/16UNOMD**	160	160
	22	1 5/16-12UN-2A	19.0	–	40	17.5	15.0	34	41	36	163	**GE22L15/16UNOMD**	160	160
	28	1 1/16-12UN-2A	18.0	33.3	40	17.5	15.0	34	41	41	152	**GE28L11/16UNOMD**	160	160
	28	1 5/16-12UN-2A	23.0	–	40	17.5	15.0	34	41	41	163	**GE28L15/16UNOMD**	160	160
	35	1 5/16-12UN-2A	23.0	39.6	43	17.5	15.0	39	46	50	222	**GE35L15/16UNOMD**	160	160
	35	1 5/8-12UN-2A	29.0	–	43	17.5	15.0	39	50	50	257	**GE35L15/8UNOMD**	160	160
	42	1 5/8-12UN-2A	29.0	47.7	45	19.0	15.0	42	55	60	339	**GE42L15/8UNOMD**	160	160
S[4])	08	7/16-20UNF-2A	4.0	–	31	13.0	11.0	30	17	19	33	**GE08S7/16UNFOMD**	630	630
	10	9/16-18UNF-2A	6.0	–	32	12.5	12.0	31	19	22	42	**GE10S9/16UNFOMD**	630	630
	12	9/16-18UNF-2A	6.0	19.0	32	12.5	12.0	31	22	24	50	**GE12S9/16UNFOMD**	630	630
	12	3/4-16UNF-2A	8.0	–	36	14.5	14.0	34	24	24	73	**GE12S3/4UNFOMD**	630	630
	16	3/4-16UNF-2A	10.0	–	35	12.5	14.0	34	24	30	90	**GE16S3/4UNFOMD**	400	400
	16	7/8-14UNF-2A	12.0	–	40	15.5	16.0	37	27	30	95	**GE16S7/8UNFOMD**	400	400
	20	3/4-16UNF-2A	10.0	23.9	42	17.5	14.0	42	32	36	132	**GE20S3/4UNFOMD**	400	400
	20	7/8-14UNF-2A	12.0	26.9	44	17.5	16.0	42	32	36	141	**GE20S7/8UNFOMD**	400	400
	20	1 1/16-12UN-2A	16.0	–	46	17.0	18.5	42	32	36	163	**GE20S11/16UNOMD**	400	400
	25	1 1/16-12UN-2A	16.0	33.3	50	19.5	18.5	47	36	46	206	**GE25S11/16UNOMD**	400	400
	25	1 5/16-12UN-2A	20.0	–	50	19.5	18.5	47	41	46	258	**GE25S15/16UNOMD**	400	400
	30	1 5/16-12UN-2A	20.0	39.6	52	20.0	18.5	50	46	50	327	**GE30S15/16UNOMD**	400	400
	30	1 5/8-12UN-2A	24.0	–	52	20.0	18.5	50	50	50	422	**GE30S15/8UNOMD**	400	400
	38	1 5/8-12UN-2A	24.0	47.7	57	22.5	18.5	57	55	60	554	**GE38S15/8UNOMD**	315	315

[1]) Pressure shown = item deliverable

[3]) L = light series; [4]) S = heavy series

$\frac{\text{PN (bar)}}{10}$ = PN (MPa)

Delivery without nut and ring. Information on ordering complete fittings or alternative sealing materials see page I7.

*Please add the **suffixes** below according to the material/surface required.

Order code suffixes			
Material	Suffix surface and material	Example	Standard sealing material (no additonal. suffix needed)
Steel	CF	GE16S3/4UNFOMDCF	NBR
Stainless Steel	71	GE16S3/4UNFOMD71	VIT

GE-NPT Male stud connector

Male NPT thread (SAE J476) / EO 24° cone end

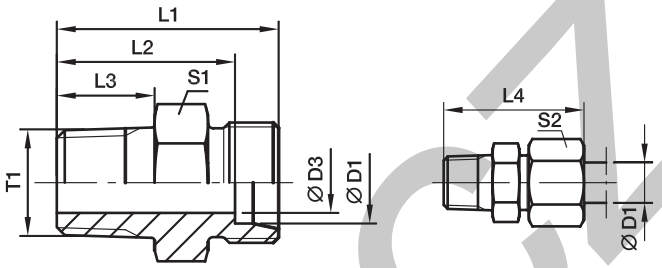

Series	D1	T1	D3	L1	L2	L3	L4	S1	S2	Weight g/1 piece	Order code*	PN (bar)[1] Steel	71	MS
LL[2])	04	1/8-27 NPT	3.0	22.0	18.0	10.0	28	11*	10	9	**GE04LL1/8NPT**	100	100	
	06	1/8-27 NPT	4.5	22.0	16.5	10.0	28	11*	12	9	**GE06LL1/8NPT**	100	100	63
	08	1/8-27 NPT	5.0	24.0	18.5	10.0	30	12	14	11	**GE08LL1/8NPT**	100	100	63
L[3])	06	1/8-27 NPT	4.0	24.0	17.0	10.0	32	12	14	12	**GE06L1/8NPT**	315	315	200
	06	1/4-18 NPT	4.0	30.0	23.0	14.5	38	17	14	27	**GE06L1/4NPT**	315	315	200
	06	3/8-18 NPT	4.0	30.0	23.0	14.5	38	19	14	32	**GE06L3/8NPT**	315	315	
	06	1/2-14 NPT	4.0	36.0	29.0	19.5	44	22	14	53	**GE06L1/2NPT**	315	315	
	08	1/8-27 NPT	4.0	25.0	18.0	10.0	33	14	17	16	**GE08L1/8NPT**	315	315	
	08	1/4-18 NPT	6.0	30.0	23.0	14.5	38	17	17	25	**GE08L1/4NPT**	315	315	200
	08	3/8-18 NPT	6.0	30.0	23.0	14.5	38	19	17	34	**GE08L3/8NPT**	315	315	
	08	1/2-14 NPT	6.0	36.0	29.0	19.5	44	22	17	54	**GE08L1/2NPT**	315	315	
	10	1/8-27 NPT	4.0	25.0	18.0	10.0	33	17	19	19	**GE10L1/8NPT**	315	315	
	10	1/4-18 NPT	7.0	31.0	24.0	14.5	39	17	19	25	**GE10L1/4NPT**	315	315	200
	10	3/8-18 NPT	7.0	32.0	25.0	14.5	40	19	19	40	**GE10L3/8NPT**	315	315	
	10	1/2-14 NPT	8.0	37.0	30.0	19.5	45	22	19	54	**GE10L1/2NPT**	315	315	
	10	3/4-14 NPT	8.0	38.0	31.0	19.5	46	30	19	93	**GE10L3/4NPT**	315	315	
	12	1/8-27 NPT	4.0	26.0	19.0	10.0	34	19	22	52	**GE12L1/8NPT**	315	315	
	12	1/4-18 NPT	7.0	32.0	25.0	14.5	40	19	22	31	**GE12L1/4NPT**	315	315	200
	12	3/8-18 NPT	8.0	32.0	25.0	14.5	40	19	22	37	**GE12L3/8NPT**	315	315	200
	12	1/2-14 NPT	10.0	37.0	30.0	19.5	45	22	22	62	**GE12L1/2NPT**	315	315	200
	15	3/8-18 NPT	8.0	33.0	26.0	14.5	41	24	27	53	**GE15L3/8NPT**	315	315	
	15	1/2-14 NPT	12.0	38.0	31.0	19.5	46	24	27	63	**GE15L1/2NPT**	315	315	200
	15	3/4-14 NPT	12.0	39.0	32.0	19.5	47	30	27	112	**GE15L3/4NPT**	315	315	
	15	1-11.5 NPT	12.0	45.0	38.0	24.5	53	36	27	158	**GE15L1NPT**	315	315	
	18	3/8-18 NPT	8.0	34.0	26.5	14.5	43	27	32	69	**GE18L3/8NPT**	315	315	
	18	1/2-14 NPT	12.0	39.0	31.5	19.5	48	27	32	79	**GE18L1/2NPT**	315	315	200
	18	3/4-14 NPT	15.0	39.0	31.5	19.5	48	30	32	104	**GE18L3/4NPT**	315	315	
	18	1-11.5 NPT	15.0	45.0	37.5	24.5	54	36	32	159	**GE18L1NPT**	315	315	
	22	3/8-18 NPT	8.0	36.5	29.0	14.5	45	32	36	91	**GE22L3/8NPT**	160	160	
	22	1/2-14 NPT	12.0	41.0	33.5	19.5	50	32	36	96	**GE22L1/2NPT**	160	160	
	22	3/4-14 NPT	16.0	41.0	33.5	19.5	50	32	36	108	**GE22L3/4NPT**	160	160	100
	22	1-11.5 NPT	19.0	47.0	39.5	24.5	56	36	36	174	**GE22L1NPT**	160	160	
	28	3/4-14 NPT	16.0	42.0	34.5	19.5	51	41	41	157	**GE28L3/4NPT**	160	160	
	28	1-11.5 NPT	21.0	47.0	39.5	24.5	56	41	41	197	**GE28L1NPT**	160	160	100
	28	1 1/4-11.5 NPT	24.0	49.0	41.5	25.0	58	46	41	266	**GE28L11/4NPT**	160	160	
	35	1-11.5 NPT	22.0	50.0	39.5	24.5	61	46	50	280	**GE35L1NPT**	160	160	
	35	1 1/4-11.5 NPT	28.0	51.0	40.5	25.0	62	46	50	285	**GE35L11/4NPT**	160	160	
	42	1 1/4-11.5 NPT	28.0	53.0	42.0	25.0	65	55	60	382	**GE42L11/4NPT**	160	160	
	42	1 1/2-11.5 NPT	36.0	53.0	42.0	26.0	65	55	60	377	**GE42L11/2NPT**	160	160	

[1]) Pressure shown = item deliverable

[2]) LL = very light series; [3]) L = light series

$\frac{PN\ (bar)}{10}$ = PN (MPa)

Delivery without nut and ring. Information on ordering complete fittings see page I7.

***S1=SW12 in 1.4571**

*Please add the **suffixes** below according to the material/surface required.

Order code suffixes		
Material	Suffix surface and material	Example
Steel	CFX	GE18L1/2NPTCFX
Stainless Steel	71X	GE18L1/2NPT71X
Brass	MSX	GE18L1/2NPTMSX

GE-NPT Male stud connector

Male NPT thread (SAE J476) / EO 24° cone end

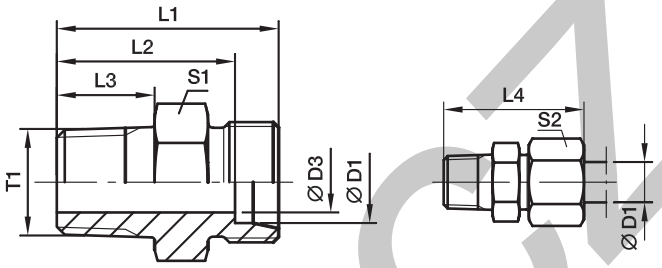

Series	D1	T1	D3	L1	L2	L3	L4	S1	S2	Weight g/1 piece	Order code*	PN (bar)[1] Steel	71	MS
S[4])	06	1/8-27 NPT	4	28	21.0	10.0	36	14	17	21	**GE06S1/8NPT**	630	630	
	06	1/4-18 NPT	4	35	28.0	14.5	43	17	17	37	**GE06S1/4NPT**	630	630	400
	06	3/8-18 NPT	4	33	26.0	14.5	41	19	17	40	**GE06S3/8NPT**	630	630	
	06	1/2-14 NPT	4	42	35.0	19.5	50	22	17	71	**GE06S1/2NPT**	630	630	
	08	1/4-18 NPT	5	35	28.0	14.5	43	17	19	38	**GE08S1/4NPT**	630	630	400
	08	3/8-18 NPT	5	35	28.0	14.5	43	19	19	46	**GE08S3/8NPT**	630	630	
	08	1/2-14 NPT	5	42	35.0	19.5	50	22	19	73	**GE08S1/2NPT**	630	630	400
	10	1/4-18 NPT	5	35	27.5	14.5	44	19	22	45	**GE10S1/4NPT**	630	630	
	10	3/8-18 NPT	7	35	27.5	14.5	44	19	22	49	**GE10S3/8NPT**	630	630	400
	10	1/2-14 NPT	7	42	34.5	19.5	51	22	22	73	**GE10S1/2NPT**	630	630	400
	10	3/4-14 NPT	7	44	36.5	19.5	53	30	22	125	**GE10S3/4NPT**	630	630	
	12	1/4-18 NPT	5	37	29.5	14.5	46	22	24	57	**GE12S1/4NPT**	630	630	
	12	3/8-18 NPT	8	37	29.5	14.5	46	22	24	62	**GE12S3/8NPT**	630	630	400
	12	1/2-14 NPT	8	42	34.5	19.5	51	22	24	83	**GE12S1/2NPT**	630	630	400
	12	3/4-14 NPT	8	44	36.5	19.5	53	30	24	126	**GE12S3/4NPT**	630	630	
	16	3/8-18 NPT	8	39	30.5	14.5	49	27	30	84	**GE16S3/8NPT**	400	400	
	16	1/2-14 NPT	12	44	39.5	19.5	58	27	30	97	**GE16S1/2NPT**	400	400	250
	16	3/4-14 NPT	12	46	37.5	19.5	56	30	30	130	**GE16S3/4NPT**	400	400	
	16	1-11.5 NPT	12	51	42.5	24.5	61	36	30	178	**GE16S1NPT**	400	400	
	20	1/2-14 NPT	12	48	37.5	19.5	59	32	36	144	**GE20S1/2NPT**	400	400	
	20	3/4-14 NPT	16	48	37.5	19.5	59	32	36	149	**GE20S3/4NPT**	400	400	250
	20	1-11.5 NPT	16	55	44.5	24.5	66	36	36	243	**GE20S1NPT**	400	400	
	25	3/4-14 NPT	16	52	40.0	19.5	64	41	46	240	**GE25S3/4NPT**	400	400	
	25	1-11.5 NPT	20	57	45.0	24.5	69	41	46	278	**GE25S1NPT**	400	400	
	25	1 1/4-11.5 NPT	20	58	46.0	25.0	70	46	46	396	**GE25S11/4NPT**	400	400	
	25	1 1/2-11.5 NPT	20	61	49.0	26.0	73	50	46	469	**GE25S11/2NPT**	400	400	
	30	3/4-14 NPT	16	54	40.5	19.5	67	46	50	307	**GE30S3/4NPT**	400	400	
	30	1-11.5 NPT	20	59	45.5	24.5	72	46	50	343	**GE30S1NPT**	400	400	100
	30	1 1/4-11.5 NPT	25	60	46.5	25.0	73	46	50	397	**GE30S11/4NPT**	400	400	
	30	1 1/2-11.5 NPT	25	60	46.5	26.0	73	50	50	440	**GE30S11/2NPT**	400	400	
	38	1-11.5 NPT	22	64	48.0	24.5	79	55	60	510	**GE38S1NPT**	315	315	
	38	1 1/4-11.5 NPT	25	65	49.0	25.0	80	55	60	535	**GE38S11/4NPT**	315	315	
	38	1 1/2-11.5 NPT	32	65	49.0	26.0	80	55	60	571	**GE38S11/2NPT**	315	315	

[1]) Pressure shown = item deliverable

[4]) S = heavy series

$\frac{\text{PN (bar)}}{10}$ = PN (MPa)

Delivery without nut and ring. Information on ordering complete fittings see page I7.

*Please add the **suffixes** below according to the material/surface required.

Order code suffixes		
Material	Suffix surface and material	Example
Steel	CFX	GE16S1/2NPTCFX
Stainless Steel	71X	GE16S1/2NPT71X
Brass	MSX	GE16S1/2NPTMSX

EGEO Swivel connector

Male metric thread – O-ring (ISO 6149) / EO 24° DKO swivel

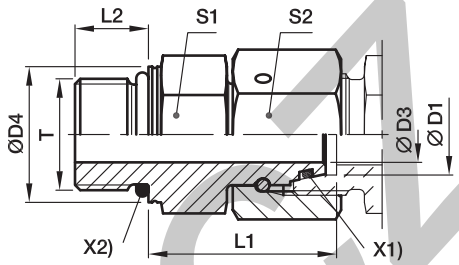

X2) O-ring OR X1) O-ring OR

Series	D1	T	D3	D4	L1	L2	S1	S2	Weight g/1 piece	Order code*	PN (bar)[1] Steel
L[3]	06	M 10×1.0	2.5	13.8	24.5	8.5	14	14	29	**EGEO06LM**	500
	08	M 12×1.5	4.0	16.8	26.5	11.0	17	17	43	**EGEO08LM**	500
	10	M 14×1.5	6.0	18.8	27.5	11.0	19	19	57	**EGEO10LM**	500
	12	M 16×1.5	8.0	21.8	30.5	11.5	22	22	85	**EGEO12LM**	400
	15	M 18×1.5	10.0	23.8	31.5	12.5	24	27	115	**EGEO15LM**	400
	18	M 22×1.5	13.0	26.8	31.5	13.0	27	32	152	**EGEO18LM**	400
	22	M 27×2.0	17.0	31.8	32.5	16.0	32	36	207	**EGEO22LM27X2**	250
	28	M 33×2.0	22.0	40.8	35.0	16.0	41	41	294	**EGEO28LM**	250
	35	M 42×2.0	28.0	49.8	42.5	16.0	50	50	516	**EGEO35LM**	250
	42	M 48×2.0	34.0	54.8	46.5	17.5	55	60	718	**EGEO42LM**	250
S[4]	06	M 12×1.5	2.5	16.8	27.0	11.0	17	17	49	**EGEO06SM**	800
	08	M 14×1.5	4.0	18.8	29.5	11.0	19	19	69	**EGEO08SM**	800
	10	M 16×1.5	6.0	21.8	32.0	12.5	22	22	96	**EGEO10SM**	800
	12	M 18×1.5	8.0	23.8	34.0	14.0	24	24	116	**EGEO12SM**	630
	16	M 22×1.5	11.0	26.8	37.0	15.0	27	30	179	**EGEO16SM**	630
	20	M 27×2.0	14.0	31.8	43.0	18.5	32	36	280	**EGEO20SM**	420
	25	M 33×2.0	18.0	40.8	48.0	18.5	41	46	502	**EGEO25SM**	420
	30	M 42×2.0	23.0	49.8	51.0	19.0	50	50	697	**EGEO30SM**	420
	38	M 48×2.0	30.0	54.8	60.0	21.5	55	60	965	**EGEO38SM**	420

[1]) Pressure shown = item deliverable

[3]) L = light series; [4]) S = heavy series

$\frac{PN\ (bar)}{10} = PN\ (MPa)$

Information on ordering alternative sealing materials see page I7.

*Please add the **suffixes** below according to the material/surface required.

Order code suffixes			
Material	Suffix surface and material	Example	Standard sealing material (no additonal. suffix needed)
Steel	CF	EGEO16SMCF	NBR

KOVAL

EGE-M-ED Swivel connector

Male metric thread – ED-seal (ISO 9974) / EO 24° DKO swivel

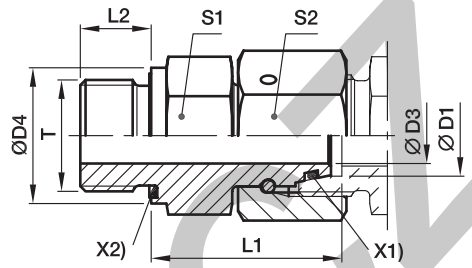

X2) Eolastic-sealing ED X1) O-ring OR

Series	D1	T	D3	D4	L1	L2	S1	S2	Weight g/1 piece	Order code*	PN (bar)[1] Steel	71
L[3])	06	M 10×1.0	2.5	14	24.5	8	14	14	27	**EGE06LMED**	500	315
	08	M 12×1.5	4.0	17	26.5	12	17	17	45	**EGE08LMED**	500	315
	10	M 14×1.5	6.0	19	27.5	12	19	19	57	**EGE10LMED**	500	315
	12	M 16×1.5	8.0	22	30.5	12	22	22	82	**EGE12LMED**	400	315
	12	M 22×1.5	8.0	27	27.0	14	27	22	92	**EGE12LM22X1.5ED**	400	315
	15	M 18×1.5	10.0	24	31.5	12	24	27	113	**EGE15LMED**	400	315
	15	M 22×1.5	10.0	27	32.0	14	27	27	142	**EGE15LM22X1.5ED**	400	315
	18	M 22×1.5	13.0	27	31.5	14	27	32	148	**EGE18LMED**	400	315
	22	M 26×1.5	17.0	32	32.5	16	32	36	203	**EGE22LMED**	250	160
	28	M 33×2.0	22.0	40	35.0	18	41	41	289	**EGE28LMED**	250	160
	35	M 42×2.0	28.0	50	42.5	20	50	50	511	**EGE35LMED**	250	160
	42	M 48×2.0	34.0	55	46.5	22	55	60	711	**EGE42LMED**	250	160
S[4])	06	M 12×1.5	2.5	17	27.0	12	17	17	47	**EGE06SMED**	800	630
	08	M 14×1.5	4.0	19	29.5	12	19	19	65	**EGE08SMED**	800	630
	10	M 16×1.5	6.0	22	32.0	12	22	22	91	**EGE10SMED**	800	630
	12	M 18×1.5	8.0	24	34.0	12	24	24	112	**EGE12SMED**	630	630
	16	M 22×1.5	11.0	27	37.0	14	27	30	174	**EGE16SMED**	630	400
	20	M 27×2.0	14.0	32	43.0	16	32	36	274	**EGE20SMED**	420	400
	25	M 33×2.0	18.0	40	48.0	18	41	46	497	**EGE25SMED**	420	400
	30	M 42×2.0	23.0	50	51.0	20	50	50	691	**EGE30SMED**	420	400
	38	M 48×2.0	30.0	55	60.0	22	55	60	957	**EGE38SMED**	420	315

[1]) Pressure shown = item deliverable

[3]) L = light series; [4]) S = heavy series

$\frac{\text{PN (bar)}}{10}$ = PN (MPa)

Information on ordering alternative sealing materials see page I7.

*Please add the **suffixes** below according to the material/surface required

Order code suffixes			
Material	Suffix surface and material	Example	Standard sealing material (no additonal. suffix needed)
Steel	CF	EGE16SMEDCF	NBR
Stainless Steel	71	EGE16SMED71	VIT

KOVAL

EGE-R-ED Swivel connector

Male BSPP thread – ED-seal (ISO 1179) / EO 24° DKO swivel

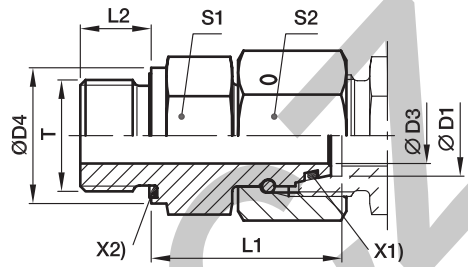

X2) Eolastic-sealing ED X1) O-ring OR

Series	D1	T	D3	D4	L1	L2	S1	S2	Weight g/1 piece	Order code*	PN (bar)[1] Steel	PN (bar)[1] 71
L[3])	06	G 1/8 A	2.5	14	24.5	8	14	14	27	**EGE06LRED**	500	315
	08	G 1/4 A	4.0	19	29.5	12	19	17	28	**EGE08LRED**	500	315
	10	G 1/4 A	6.0	19	27.5	12	19	19	54	**EGE10LRED**	500	315
	10	G 3/8 A	6.0	22	29.0	12	22	19	70	**EGE10LR3/8ED**	400	315
	12	G 3/8 A	8.0	22	34.0	12	22	22	95	**EGE12LRED**	400	315
	12	G 1/4 A	6.0	19	27.5	12	19	22	65	**EGE12LR1/4ED**	400	315
	12	G 1/2 A	8.0	27	29.5	14	27	22	114	**EGE12LR1/2ED**	400	315
	15	G 1/2 A	10.0	27	32.0	14	27	27	137	**EGE15LRED**	400	315
	18	G 1/2 A	13.0	27	31.5	14	27	32	143	**EGE18LRED**	400	315
	18	G 3/4 A	13.0	32	29.5	16	32	32	182	**EGE18LR3/4ED**	250	160
	22	G 3/4 A	17.0	32	32.5	16	32	36	200	**EGE22LRED**	250	160
	28	G 1 A	22.0	40	35.0	18	41	41	289	**EGE28LRED**	250	160
	35	G 1 1/4 A	28.0	50	42.5	20	50	50	500	**EGE35LRED**	250	160
	42	G 1 1/2 A	34.0	55	46.5	22	55	60	718	**EGE42LRED**	250	160
S[4])	06	G 1/4 A	2.5	19	27.0	12	19	17	53	**EGE06SRED**	800	630
	08	G 1/4 A	4.0	19	29.5	12	19	19	64	**EGE08SRED**	800	630
	10	G 3/8 A	6.0	22	32.0	12	22	22	93	**EGE10SRED**	800	630
	12	G 3/8 A	8.0	22	34.0	12	22	24	100	**EGE12SRED**	630	630
	12	G 1/4 A	5.0	19	31.5	12	19	24	140	**EGE12SR1/4ED**	630	630
	12	G 1/2 A	8.0	27	35.0	14	27	24	140	**EGE12SR1/2ED**	630	630
	16	G 1/2 A	11.0	27	37.0	14	27	30	170	**EGE16SRED**	630	400
	20	G 3/4 A	14.0	32	43.0	16	32	36	273	**EGE20SRED**	420	400
	25	G 1 A	18.0	40	48.0	18	41	46	493	**EGE25SRED**	420	400
	30	G 1 1/4 A	23.0	50	51.0	20	50	50	691	**EGE30SRED**	420	400
	38	G 1 1/2 A	30.0	55	60.0	22	55	60	934	**EGE38SRED**	420	315

[1]) Pressure shown = item deliverable

[3]) L = light series; [4]) S = heavy series

$\frac{PN\ (bar)}{10} = PN\ (MPa)$

Information on ordering alternative sealing materials see page I7.

*Please add the **suffixes** below according to the material/surface required.

Order code suffixes			
Material	Suffix surface and material	Example	Standard sealing material (no additonal. suffix needed)
Steel	CF	EGE16SREDCF	NBR
Stainless Steel	71	EGE16SRED71	VIT

KOMAT

EGE-NPT Swivel connector

Male NPT thread (SAE J476) / EO 24° DKO swivel

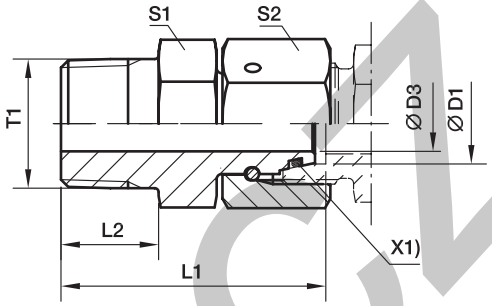

X1) O-ring OR

Series	D1	T1	D3	L1	L2	S1	S2	Weight g/1 piece	Order code*	PN (bar)[1] Steel
L[3])	06	1/8-27 NPT	2.5	31.5	10.0	11	14	23	**EGE06L1/8NPT**	315
	08	1/4-18 NPT	4.0	37.5	14.5	14	17	41	**EGE08L1/4NPT**	315
	10	1/4-18 NPT	6.0	38.0	14.5	14	19	44	**EGE10L1/4NPT**	315
	12	3/8-18 NPT	8.0	40.0	14.5	19	22	69	**EGE12L3/8NPT**	315
	15	1/2-14 NPT	10.0	49.5	19.5	22	27	127	**EGE15L1/2NPT**	315
	18	1/2-14 NPT	12.0	49.0	19.5	24	32	142	**EGE18L1/2NPT**	315
	22	3/4-14 NPT	16.0	52.0	19.5	27	36	200	**EGE22L3/4NPT**	160
	28	1-11.5 NPT	22.0	61.0	24.5	36	41	306	**EGE28L1NPT**	160
	35	1 1/4-11.5 NPT	28.0	65.5	25.0	46	50	486	**EGE35L11/4NPT**	160
	42	1 1/2-11.5 NPT	34.0	68.5	26.0	50	60	662	**EGE42L11/2NPT**	160
S[4])	06	1/4-18 NPT	2.5	37.5	14.5	14	17	42	**EGE06S1/4NPT**	630
	08	1/4-18 NPT	4.0	38.0	14.5	14	19	47	**EGE08S1/4NPT**	630
	10	3/8-18 NPT	6.0	40.5	14.5	19	22	75	**EGE10S3/8NPT**	630
	12	3/8-18 NPT	8.0	42.0	14.5	19	24	81	**EGE12S3/8NPT**	630
	16	1/2-14 NPT	11.0	51.0	19.5	22	30	145	**EGE16S1/2NPT**	400
	20	3/4-14 NPT	14.0	54.0	19.5	27	36	221	**EGE20S3/4NPT**	400
	25	1-11.5 NPT	18.0	63.5	24.5	36	46	422	**EGE25S1NPT**	400
	30	1 1/4-11.5 NPT	23.0	70.5	25.0	46	50	628	**EGE30S11/4NPT**	400
	38	1 1/2-11.5 NPT	30.0	73.5	26.0	50	60	770	**EGE38S11/2NPT**	315

[1]) Pressure shown = item deliverable

[3]) L = light series; [4]) S = heavy series

$\frac{\text{PN (bar)}}{10}$ = PN (MPa)

Information on ordering alternative sealing materials see page I7.

*Please add the **suffixes** below according to the material/surface required.

Order code suffixes			
Material	Suffix surface and material	Example	Standard sealing material (no additonal. suffix needed)
Steel	CF	EGE16S1/2NPTCF	NBR

KOVACZ

EW-M-ED Assembled adjustable swivel elbow

EO 24° cone end / Male metric thread – ED-seal (ISO 9974)

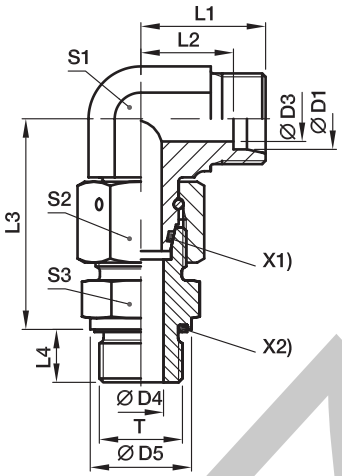

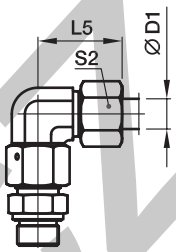

X1) O-ring OR
X2) Eolastic-sealing ED

Series	D1	T	D3	D4	D5	L1	L2	L3	L4	L5	S1	S2	S3	Weight g/1 piece	Order code*	PN (bar)[1] Steel	71
L[3]	06	M 10×1.0	4	4	14	19	12.0	34.5	8	27	12	14	14	47	**EW06LMEDOMD**	500	315
	08	M 12×1.5	6	6	17	21	14.0	37.5	12	29	12	17	17	69	**EW08LMEDOMD**	500	315
	10	M 14×1.5	8	7	19	22	15.0	40.0	12	30	14	19	19	87	**EW10LMEDOMD**	500	315
	12	M 16×1.5	10	9	22	24	17.0	42.0	12	32	17	22	22	111	**EW12LMEDOMD**	400	315
	15	M 18×1.5	12	11	24	28	21.0	46.0	12	36	19	27	24	179	**EW15LMEDOMD**	400	315
	18	M 22×1.5	15	14	27	31	23.5	50.0	14	40	24	32	27	272	**EW18LMEDOMD**	400	315
	22	M 26×1.5	19	18	32	35	27.5	55.0	16	44	27	36	32	360	**EW22LMEDOMD**	250	160
	28	M 33×2.0	24	23	40	38	30.5	59.0	18	47	36	41	41	538	**EW28LMEDOMD**	250	160
	35	M 42×2.0	30	30	50	45	34.5	68.5	20	56	41	50	50	843	**EW35LMEDOMD**	250	160
	42	M 48×2.0	36	36	55	51	40.0	75.0	22	63	50	60	55	1353	**EW42LMEDOMD**	250	160
S[4]	06	M 12×1.5	4	4	17	23	16.0	40.0	12	31	12	17	17	77	**EW06SMEDOMD**	800	630
	08	M 14×1.5	5	5	19	24	17.0	42.5	12	32	14	19	19	107	**EW08SMEDOMD**	800	630
	10	M 16×1.5	6	7	22	25	17.5	45.0	12	34	17	22	22	146	**EW10SMEDOMD**	800	630
	12	M 18×1.5	8	8	24	29	21.5	48.0	12	38	17	24	24	178	**EW12SMEDOMD**	630	630
	16	M 22×1.5	12	12	27	33	24.5	55.0	14	43	24	30	27	307	**EW16SMEDOMD**	630	400
	20	M 27×2.0	16	16	32	37	26.5	65.0	16	48	27	36	32	459	**EW20SMEDOMD**	420	400
	25	M 33×2.0	20	20	40	42	30.0	73.0	18	54	36	46	41	812	**EW25SMEDOMD**	420	400
	30	M 42×2.0	25	25	50	49	35.5	78.5	20	62	41	50	50	1167	**EW30SMEDOMD**	420	400
	38	M 48×2.0	32	32	55	57	41.0	89.0	22	72	50	60	55	1790	**EW38SMEDOMD**	420	315

[1]) Pressure shown = item deliverable
[3]) L = light series; [4]) S = heavy series

$\frac{\text{PN (bar)}}{10}$ = PN (MPa)

Delivery without nut and ring. Information on ordering complete fittings or alternative sealing materials see page I7.

*Please add the **suffixes** below according to the material/surface required.

Order code suffixes			
Material	Suffix surface and material	Example	Standard sealing material (no additonal. suffix needed)
Steel	CF	EW16SMEDOMDCF	NBR
Stainless Steel	71	EW16SMEDOMD71	VIT

KOMAT.cz

EW-R-ED Assembled adjustable swivel elbow

EO 24° cone end / Male BSPP thread – ED-seal (ISO 1179)

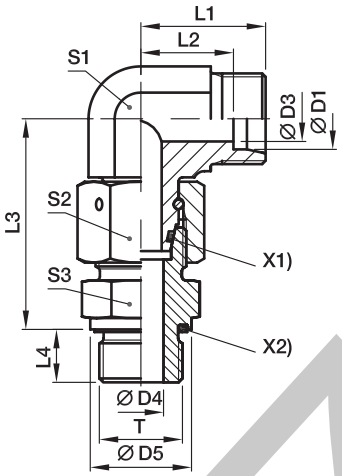

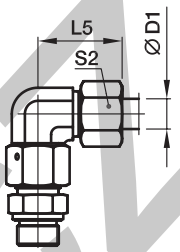

X1) O-ring OR
X2) Eolastic-sealing ED

Series	D1	T	D3	D4	D5	L1	L2	L3	L4	L5	S1	S2	S3	Weight g/1 piece	Order code*	PN (bar)[1] Steel	71
L[3]	06	G 1/8 A	4	4	14	19	12.0	34.5	8	27	12	14	14	47	**EW06LREDOMD**	500	315
	08	G 1/4 A	6	6	19	21	14.0	37.5	12	29	12	17	19	69	**EW08LREDOMD**	500	315
	10	G 1/4 A	8	6	19	22	15.0	40.0	12	30	14	19	19	87	**EW10LREDOMD**	500	315
	12	G 3/8 A	10	9	22	24	17.0	42.0	12	32	17	22	22	122	**EW12LREDOMD**	400	315
	15	G 1/2 A	12	11	27	28	21.0	46.5	14	36	19	27	27	199	**EW15LREDOMD**	400	315
	18	G 1/2 A	15	14	27	31	23.5	50.0	14	40	24	32	27	268	**EW18LREDOMD**	400	315
	22	G 3/4 A	19	18	32	35	27.5	55.0	16	44	27	36	32	360	**EW22LREDOMD**	250	160
	28	G 1 A	24	23	40	38	30.5	59.0	18	47	36	41	41	539	**EW28LREDOMD**	250	160
	35	G 1 1/4 A	30	30	50	45	34.5	68.5	20	56	41	50	50	834	**EW35LREDOMD**	250	160
	42	G 1 1/2 A	36	36	55	51	40.0	75.0	22	63	50	60	55	1341	**EW42LREDOMD**	250	160
S[4]	06	G 1/4 A	4	4	19	23	16.0	40.0	12	31	12	17	19	83	**EW06SREDOMD**	800	630
	08	G 1/4 A	5	5	19	24	17.0	42.5	12	32	14	19	19	106	**EW08SREDOMD**	800	630
	10	G 3/8 A	6	7	22	25	17.5	45.0	12	34	17	22	22	148	**EW10SREDOMD**	800	630
	12	G 3/8 A	8	8	22	29	21.5	48.0	12	38	17	24	22	170	**EW12SREDOMD**	630	630
	16	G 1/2 A	12	12	27	33	24.5	55.0	14	43	24	30	27	303	**EW16SREDOMD**	630	400
	20	G 3/4 A	16	16	32	37	26.5	65.0	16	48	27	36	32	458	**EW20SREDOMD**	420	400
	25	G 1 A	20	20	40	42	30.0	73.0	18	54	36	46	41	813	**EW25SREDOMD**	420	400
	30	G 1 1/4 A	25	25	50	49	35.5	78.5	20	62	41	50	50	1163	**EW30SREDOMD**	420	400
	38	G 1 1/2 A	32	32	55	57	41.0	89.0	22	72	50	60	55	1784	**EW38SREDOMD**	420	315

[1]) Pressure shown = item deliverable

[3]) L = light series; [4]) S = heavy series

$\frac{\text{PN (bar)}}{10}$ = PN (MPa)

Delivery without nut and ring. Information on ordering complete fittings or alternative sealing materials see page I7.

*Please add the **suffixes** below according to the material/surface required.

Order code suffixes			
Material	Suffix surface and material	Example	Standard sealing material (no additonal. suffix needed)
Steel	CF	EW16SREDOMDCF	NBR
Stainless Steel	71	EW16SREDOMD71	VIT

KOMZ.cz

EV-M-ED Assembled adjustable swivel 45° elbow

EO 24° cone end / Male metric thread – ED-seal (ISO 9974)

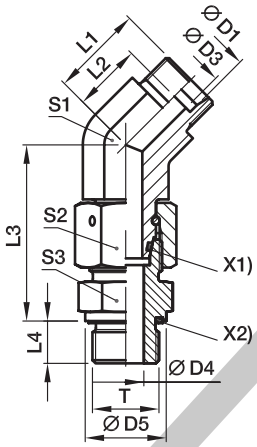

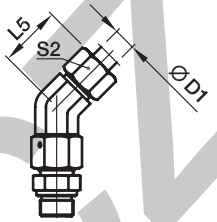

X1) O-ring OR
X2) Eolastic-sealing ED

Series	D1	T	D3	D4	D5	L1	L2	L3	L4	L5	S1	S2	S3	Weight g/1 piece	Order code*	PN (bar)[1] Steel	PN (bar)[1] 71
L[3]	06	M 10×1.0	4	4	14	16.0	9.0	34.5	8	24	14	14	14	44	**EV06LMEDOMD**	315	315
	08	M 12×1.5	6	6	17	19.0	12.0	37.5	12	27	14	17	17	62	**EV08LMEDOMD**	315	315
	10	M 14×1.5	8	7	19	19.0	12.0	40.0	12	27	19	19	19	80	**EV10LMEDOMD**	315	315
	12	M 16×1.5	10	9	22	21.0	14.0	42.0	12	29	19	22	22	110	**EV12LMEDOMD**	315	315
	15	M 18×1.5	12	11	24	24.0	17.0	46.0	12	32	22	27	24	171	**EV15LMEDOMD**	315	315
	18	M 22×1.5	15	14	27	24.0	16.5	50.0	14	33	27	32	27	245	**EV18LMEDOMD**	315	315
	22	M 26×1.5	19	18	32	26.0	18.5	55.0	16	35	30	36	32	339	**EV22LMEDOMD**	160	160
	28	M 33×2.0	24	23	40	30.5	23.0	59.0	18	40	36	41	41	517	**EV28LMEDOMD**	160	160
	35	M 42×2.0	30	30	50	37.0	26.5	68.5	20	48	50	50	50	810	**EV35LMEDOMD**	160	160
	42	M 48×2.0	36	36	55	37.0	26.0	75.0	22	49	50	60	55	1193	**EV42LMEDOMD**	160	160
S[4]	06	M 12×1.5	4	4	17	16.0	9.0	40.0	12	24	14	17	17	72	**EV06SMEDOMD**	630	630
	08	M 14×1.5	5	5	19	19.0	12.0	42.5	12	27	19	19	19	102	**EV08SMEDOMD**	630	630
	10	M 16×1.5	7	7	22	21.0	13.5	45.0	12	30	19	22	22	132	**EV10SMEDOMD**	630	630
	12	M 18×1.5	8	8	24	24.0	16.5	48.0	12	33	22	24	24	173	**EV12SMEDOMD**	630	630
	16	M 22×1.5	12	12	27	24.0	15.5	55.0	14	34	27	30	27	284	**EV16SMEDOMD**	400	400
	20	M 27×2.0	16	16	32	26.5	16.0	65.0	16	38	30	36	32	435	**EV20SMEDOMD**	400	400
	25	M 33×2.0	20	20	40	30.5	18.5	73.0	18	43	36	46	41	790	**EV25SMEDOMD**	400	400
	30	M 42×2.0	25	25	50	37.0	23.5	78.5	20	50	50	50	50	1132	**EV30SMEDOMD**	400	400
	38	M 48×2.0	32	32	55	37.0	21.0	89.0	22	52	50	60	55	1631	**EV38SMEDOMD**	315	315

[1]) Pressure shown = item deliverable
[3]) L = light series; [4]) S = heavy series

$\frac{\text{PN (bar)}}{10}$ = PN (MPa)

Delivery without nut and ring. Information on ordering complete fittings or alternative sealing materials see page I7.

*Please add the **suffixes** below according to the material/surface required.

Order code suffixes			
Material	Suffix surface and material	Example	Standard sealing material (no additonal. suffix needed)
Steel	CF	EV16SMEDOMDCF	NBR
Stainless Steel	71	EV16SMEDOMD71	VIT

KOMAT.CZ

EV-R-ED Assembled adjustable swivel 45° elbow

EO 24° cone end / Male BSPP thread – ED-seal (ISO 1179)

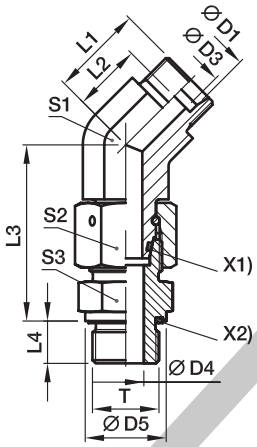

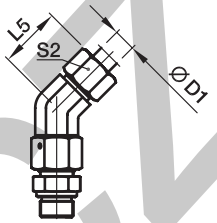

X1) O-ring OR
X2) Eolastic-sealing ED

Series	D1	T	D3	D4	D5	L1	L2	L3	L4	L5	S1	S2	S3	Weight g/1 piece	Order code*	PN (bar)[1] Steel	71
L[3]	06	G 1/8 A	4	4	14	16.0	9.0	34.5	8	24	14	14	14	44	**EV06LREDOMD**	315	315
	08	G 1/4 A	6	6	19	19.0	12.0	37.5	12	27	14	17	19	67	**EV08LREDOMD**	315	315
	10	G 1/4 A	8	6	19	19.0	12.0	40.0	12	27	19	19	19	78	**EV10LREDOMD**	315	315
	12	G 3/8 A	10	9	22	21.0	14.0	42.0	12	29	19	22	22	112	**EV12LREDOMD**	315	315
	15	G 1/2 A	12	11	27	24.0	17.0	46.5	14	32	22	27	27	192	**EV15LREDOMD**	315	315
	18	G 1/2 A	15	14	27	24.0	16.5	50.0	14	33	27	32	27	242	**EV18LREDOMD**	315	315
	22	G 3/4 A	19	18	32	26.0	18.5	55.0	16	35	30	36	32	338	**EV22LREDOMD**	160	160
	28	G 1 A	24	23	40	30.5	23.0	59.0	18	40	36	41	41	518	**EV28LREDOMD**	160	160
	35	G 1 1/4 A	30	30	50	37.0	26.5	68.5	20	48	50	50	50	801	**EV35LREDOMD**	160	160
	42	G 1 1/2 A	36	36	55	37.0	26.0	75.0	22	49	50	60	55	1181	**EV42LREDOMD**	160	160
S[4]	06	G 1/4 A	4	4	19	16.0	9.0	40.0	12	24	14	17	19	78	**EV06SREDOMD**	630	630
	08	G 1/4 A	5	5	19	19.0	12.0	42.5	12	27	19	19	19	101	**EV08SREDOMD**	630	630
	10	G 3/8 A	7	7	22	21.0	13.5	45.0	12	30	19	22	22	134	**EV10SREDOMD**	630	630
	12	G 3/8 A	8	8	22	24.0	16.5	48.0	12	33	22	24	22	165	**EV12SREDOMD**	630	630
	16	G 1/2 A	12	12	27	24.0	15.5	55.0	14	34	27	30	27	280	**EV16SREDOMD**	400	400
	20	G 3/4 A	16	16	32	26.5	16.0	65.0	16	38	30	36	32	434	**EV20SREDOMD**	400	400
	25	G 1 A	20	20	40	30.5	18.5	73.0	18	43	36	46	41	792	**EV25SREDOMD**	400	400
	30	G 1 1/4 A	25	25	50	37.0	23.5	78.5	20	50	50	50	50	1128	**EV30SREDOMD**	400	400
	38	G 1 1/2 A	32	32	55	37.0	21.0	89.0	22	52	50	60	55	1625	**EV38SREDOMD**	315	315

[1]) Pressure shown = item deliverable

[3]) L = light series; [4]) S = heavy series

$\frac{\text{PN (bar)}}{10}$ = PN (MPa)

Delivery without nut and ring. Information on ordering complete fittings or alternative sealing materials see page I7.

*Please add the **suffixes** below according to the material/surface required.

Order code suffixes			
Material	Suffix surface and material	Example	Standard sealing material (no additonal. suffix needed)
Steel	CF	EV16SREDOMDCF	NBR
Stainless Steel	71	EV16SREDOMD71	VIT

KOMAT.CZ

ET-M-ED Assembled adjustable swivel branch tee

EO 24° cone end / Male metric thread – ED-seal (ISO 9974)

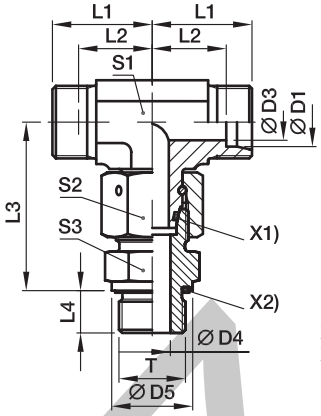

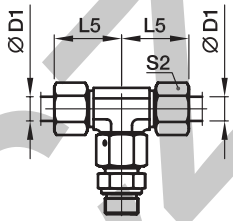

X1) O-ring OR
X2) Eolastic-sealing ED

Series	D1	T	D3	D4	D5	L1	L2	L3	L4	L5	S1	S2	S3	Weight g/1 piece	Order code*	PN (bar)[1] Steel	71
L[3]	06	M 10×1.0	4	4	14	19	12.0	34.5	8	27	12	14	14	55	**ET06LMEDOMD**	500	315
	08	M 12×1.5	6	6	17	21	14.0	37.5	12	29	12	17	17	75	**ET08LMEDOMD**	500	315
	10	M 14×1.5	8	7	19	22	15.0	40.0	12	30	14	19	19	98	**ET10LMEDOMD**	500	315
	12	M 16×1.5	10	9	22	24	17.0	42.0	12	32	17	22	22	135	**ET12LMEDOMD**	400	315
	15	M 18×1.5	12	11	24	28	21.0	46.0	12	36	19	27	24	203	**ET15LMEDOMD**	400	315
	18	M 22×1.5	15	14	27	31	23.5	50.0	14	40	24	32	27	310	**ET18LMEDOMD**	400	315
	22	M 26×1.5	19	18	32	35	27.5	55.0	16	44	27	36	32	377	**ET22LMEDOMD**	250	160
	28	M 33×2.0	24	23	40	38	30.5	59.0	18	47	36	41	41	607	**ET28LMEDOMD**	250	160
	35	M 42×2.0	30	30	50	45	34.5	68.5	20	56	41	50	50	929	**ET35LMEDOMD**	250	160
	42	M 48×2.0	36	36	55	51	40.0	75.0	22	63	50	60	55	1478	**ET42LMEDOMD**	250	160
S[4]	06	M 12×1.5	4	4	17	23	16.0	40.0	12	31	12	17	17	92	**ET06SMEDOMD**	800	630
	08	M 14×1.5	5	5	19	24	17.0	42.5	12	32	14	19	19	126	**ET08SMEDOMD**	800	630
	10	M 16×1.5	6	7	22	25	17.5	45.0	12	34	17	22	22	167	**ET10SMEDOMD**	800	630
	12	M 18×1.5	8	8	24	29	21.5	48.0	12	38	17	24	24	207	**ET12SMEDOMD**	630	630
	16	M 22×1.5	12	12	27	33	24.5	55.0	14	43	24	30	27	352	**ET16SMEDOMD**	630	400
	20	M 27×2.0	16	16	32	37	26.5	65.0	16	48	27	36	32	498	**ET20SMEDOMD**	420	400
	25	M 33×2.0	20	20	40	42	30.0	73.0	18	54	36	46	41	916	**ET25SMEDOMD**	420	400
	30	M 42×2.0	25	25	50	49	35.5	78.5	20	62	41	50	50	1328	**ET30SMEDOMD**	420	400
	38	M 48×2.0	32	32	55	57	41.0	89.0	22	72	50	60	55	2031	**ET38SMEDOMD**	420	315

[1]) Pressure shown = item deliverable
[3]) L = light series; [4]) S = heavy series

$\frac{PN\ (bar)}{10} = PN\ (MPa)$

Delivery without nut and ring. Information on ordering complete fittings or alternative sealing materials see page I7.

*Please add the **suffixes** below according to the material/surface required.

Order code suffixes			
Material	Suffix surface and material	Example	Standard sealing material (no additonal. suffix needed)
Steel	CF	ET16SMEDOMDCF	NBR
Stainless Steel	71	ET16SMEDOMD71	VIT

ET-R-ED Assembled adjustable swivel branch tee

EO 24° cone end / Male BSPP thread – ED-seal (ISO 1179)

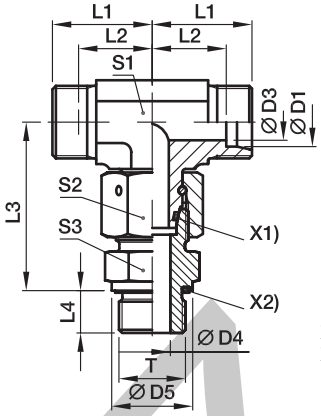

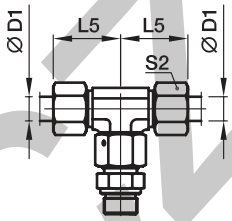

X1) O-ring OR
X2) Eolastic-sealing ED

Series	D1	T	D3	D4	D5	L1	L2	L3	L4	L5	S1	S2	S3	Weight g/1 piece	Order code*	PN (bar)[1] Steel	71
L[3]	06	G 1/8 A	4	4	14	19	12.0	34.5	8	27	12	14	14	55	**ET06LREDOMD**	500	315
	08	G 1/4 A	6	6	19	21	14.0	37.5	12	29	12	17	19	80	**ET08LREDOMD**	500	315
	10	G 1/4 A	8	6	19	22	15.0	40.0	12	30	14	19	19	98	**ET10LREDOMD**	500	315
	12	G 3/8 A	10	9	22	24	17.0	42.0	12	32	17	22	22	136	**ET12LREDOMD**	400	315
	15	G 1/2 A	12	11	27	28	21.0	46.5	14	36	19	27	27	224	**ET15LREDOMD**	400	315
	18	G 1/2 A	15	14	27	31	23.5	50.0	14	40	24	32	27	306	**ET18LREDOMD**	400	315
	22	G 3/4 A	19	18	32	35	27.5	55.0	16	44	27	36	32	423	**ET22LREDOMD**	250	160
	28	G 1 A	24	23	40	38	30.5	59.0	18	47	36	41	41	608	**ET28LREDOMD**	250	160
	35	G 1 1/4 A	30	30	50	45	34.5	68.5	20	56	41	50	50	920	**ET35LREDOMD**	250	160
	42	G 1 1/2 A	36	36	55	51	40.0	75.0	22	63	50	60	55	1466	**ET42LREDOMD**	250	160
S[4]	06	G 1/4 A	4	4	19	23	16.0	40.0	12	31	12	17	19	98	**ET06SREDOMD**	800	630
	08	G 1/4 A	5	5	19	24	17.0	42.5	12	32	14	19	19	125	**ET08SREDOMD**	800	630
	10	G 3/8 A	6	7	22	25	17.5	45.0	12	34	17	22	22	169	**ET10SREDOMD**	800	630
	12	G 3/8 A	8	8	22	29	21.5	48.0	12	38	17	24	22	198	**ET12SREDOMD**	630	630
	16	G 1/2 A	12	12	27	33	24.5	55.0	14	43	24	30	27	348	**ET16SREDOMD**	630	400
	20	G 3/4 A	16	16	32	37	26.5	65.0	16	48	27	36	32	498	**ET20SREDOMD**	420	400
	25	G 1 A	20	20	40	42	30.0	73.0	18	54	36	46	41	918	**ET25SREDOMD**	420	400
	30	G 1 1/4 A	25	25	50	49	35.5	78.5	20	62	41	50	50	1324	**ET30SREDOMD**	420	400
	38	G 1 1/2 A	32	32	55	57	41.0	89.0	22	72	50	60	55	2025	**ET38SREDOMD**	420	315

[1]) Pressure shown = item deliverable

[3]) L = light series; [4]) S = heavy series

$\frac{\text{PN (bar)}}{10}$ = PN (MPa)

Delivery without nut and ring. Information on ordering complete fittings or alternative sealing materials see page I7.

*Please add the **suffixes** below according to the material/surface required

Order code suffixes			
Material	Suffix surface and material	Example	Standard sealing material (no additonal. suffix needed)
Steel	CF	ET16SREDOMDCF	NBR
Stainless Steel	71	ET16SREDOMD71	VIT

EL-M-ED Assembled adjustable swivel run tee

EO 24° cone end / Male metric thread – ED-seal (ISO 9974)

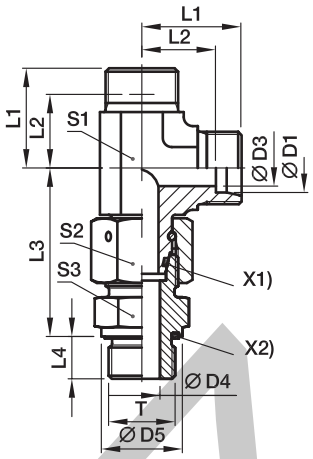

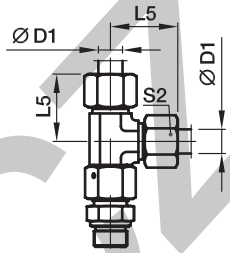

X1) O-ring OR
X2) Eolastic-sealing ED

Series	D1	T	D3	D4	D5	L1	L2	L3	L4	L5	S1	S2	S3	Weight g/1 piece	Order code*	PN (bar)[1] Steel	71
L[3])	06	M 10×1.0	4	4	14	19	12.0	34.5	8	27	12	14	14	55	**EL06LMEDOMD**	500	315
	08	M 12×1.5	6	6	17	21	14.0	37.5	12	29	12	17	17	75	**EL08LMEDOMD**	500	315
	10	M 14×1.5	8	7	19	22	15.0	40.0	12	30	14	19	19	97	**EL10LMEDOMD**	500	315
	12	M 16×1.5	10	9	22	24	17.0	42.0	12	32	17	22	22	135	**EL12LMEDOMD**	400	315
	15	M 18×1.5	12	11	24	28	21.0	46.0	12	36	19	27	24	201	**EL15LMEDOMD**	400	315
	18	M 22×1.5	15	14	27	31	23.5	50.0	14	40	24	32	27	308	**EL18LMEDOMD**	400	315
	22	M 26×1.5	19	18	32	35	27.5	55.0	16	44	27	36	32	404	**EL22LMEDOMD**	250	160
	28	M 33×2.0	24	23	40	38	30.5	59.0	18	47	36	41	41	605	**EL28LMEDOMD**	250	160
	35	M 42×2.0	30	30	50	45	34.5	68.5	20	56	41	50	50	947	**EL35LMEDOMD**	250	160
	42	M 48×2.0	36	36	55	51	40.0	75.0	22	63	50	60	55	1497	**EL42LMEDOMD**	250	160
S[4])	06	M 12×1.5	4	4	17	23	16.0	40.0	12	31	12	17	17	91	**EL06SMEDOMD**	800	630
	08	M 14×1.5	5	5	19	24	17.0	42.5	12	32	14	19	19	126	**EL08SMEDOMD**	800	630
	10	M 16×1.5	6	7	22	25	17.5	45.0	12	34	17	22	22	169	**EL10SMEDOMD**	800	630
	12	M 18×1.5	8	8	24	29	21.5	48.0	12	38	17	24	24	206	**EL12SMEDOMD**	630	630
	16	M 22×1.5	12	12	27	33	24.5	55.0	14	43	24	30	27	354	**EL16SMEDOMD**	630	400
	20	M 27×2.0	16	16	32	37	26.5	65.0	16	48	27	36	32	526	**EL20SMEDOMD**	420	400
	25	M 33×2.0	20	20	40	42	30.0	73.0	18	54	36	46	41	919	**EL25SMEDOMD**	420	400
	30	M 42×2.0	25	25	50	49	35.5	78.5	20	62	41	50	50	1328	**EL30SMEDOMD**	420	400
	38	M 48×2.0	32	32	55	57	41.0	89.0	22	72	50	60	55	2039	**EL38SMEDOMD**	420	315

[1]) Pressure shown = item deliverable
[3]) L = light series; [4]) S = heavy series

$\frac{PN\ (bar)}{10} = PN\ (MPa)$

Delivery without nut and ring. Information on ordering complete fittings or alternative sealing materials see page I7.

*Please add the **suffixes** below according to the material/surface required.

Order code suffixes			
Material	Suffix surface and material	Example	Standard sealing material (no additonal. suffix needed)
Steel	CF	EL16SMEDOMDCF	NBR
Stainless Steel	71	EL16SMEDOMD71	VIT

EL-R-ED Assembled adjustable swivel run tee

EO 24° cone end / Male BSPP thread – ED-seal (ISO 1179)

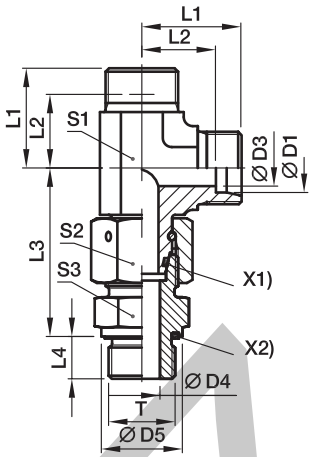

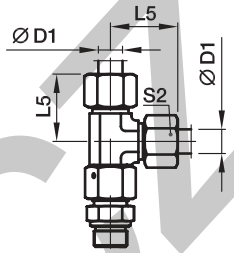

X1) O-ring OR
X2) Eolastic-sealing ED

Series	D1	T	D3	D4	D5	L1	L2	L3	L4	L5	S1	S2	S3	Weight g/1 piece	Order code*	PN (bar)[1] Steel	71
L[3])	06	G 1/8 A	4	4	14	19	12.0	34.5	8	27	12	14	14	55	**EL06LREDOMD**	500	315
	08	G 1/4 A	6	6	19	21	14.0	37.5	12	29	12	17	19	80	**EL08LREDOMD**	500	315
	10	G 1/4 A	8	6	19	22	15.0	40.0	12	30	14	19	19	97	**EL10LREDOMD**	500	315
	12	G 3/8 A	10	9	22	24	17.0	42.0	12	32	17	22	22	137	**EL12LREDOMD**	400	315
	15	G 1/2 A	12	11	27	28	21.0	46.5	14	36	19	27	27	222	**EL15LREDOMD**	400	315
	18	G 1/2 A	15	14	27	31	23.5	50.0	14	40	24	32	27	304	**EL18LREDOMD**	400	315
	22	G 3/4 A	19	18	32	35	27.5	55.0	16	44	27	36	32	404	**EL22LREDOMD**	250	160
	28	G 1 A	24	23	40	38	30.5	59.0	18	47	36	41	41	606	**EL28LREDOMD**	250	160
	35	G 1 1/4 A	30	30	50	45	34.5	68.5	20	56	41	50	50	938	**EL35LREDOMD**	250	160
	42	G 1 1/2 A	36	36	55	51	40.0	75.0	22	63	50	60	55	1485	**EL42LREDOMD**	250	160
S[4])	06	G 1/4 A	4	4	19	23	16.0	40.0	12	31	12	17	19	97	**EL06SREDOMD**	800	630
	08	G 1/4 A	5	5	19	24	17.0	42.5	12	32	14	19	19	125	**EL08SREDOMD**	800	630
	10	G 3/8 A	6	7	22	25	17.5	45.0	12	34	17	22	22	171	**EL10SREDOMD**	800	630
	12	G 3/8 A	8	8	22	29	21.5	48.0	12	38	17	24	22	198	**EL12SREDOMD**	630	630
	16	G 1/2 A	12	12	27	33	24.5	55.0	14	43	24	30	27	350	**EL16SREDOMD**	630	400
	20	G 3/4 A	16	16	32	37	26.5	65.0	16	48	27	36	32	524	**EL20SREDOMD**	420	400
	25	G 1 A	20	20	40	42	30.0	73.0	18	54	36	46	41	921	**EL25SREDOMD**	420	400
	30	G 1 1/4 A	25	25	50	49	35.5	78.5	20	62	41	50	50	1324	**EL30SREDOMD**	420	400
	38	G 1 1/2 A	32	32	55	57	41.0	89.0	22	72	50	60	55	2033	**EL38SREDOMD**	420	315

[1]) Pressure shown = item deliverable

[3]) L = light series; [4]) S = heavy series

$\frac{PN\ (bar)}{10} = PN\ (MPa)$

Delivery without nut and ring. Information on ordering complete fittings or alternative sealing materials see page I7.

*Please add the **suffixes** below according to the material/surface required.

Order code suffixes			
Material	Suffix surface and material	Example	Standard sealing material (no additonal. suffix needed)
Steel	CF	EL16SREDOMDCF	NBR
Stainless Steel	71	EL16SREDOMD71	VIT

WEE-R Adjustable locknut elbow

EO 24° cone end / Adjustable BSPP thread – O-ring + retaining ring (ISO 1179)
for ports with small or wide spot face;
differences in D5 in Stainless Steel are only for ports with wide spot face
(e.g. WEE16SRBOMD71)

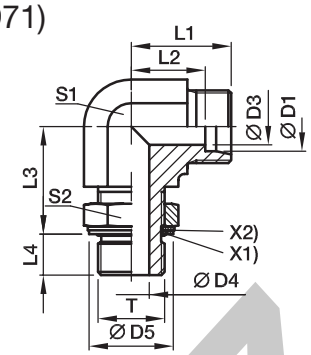

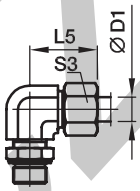

X1) O-ring OR
X2) retaining ring

Series	D1	T	D3	D4	D5[5])	D5[6])	L1	L2	L3	L4	L5	S1	S2	S3	Weight g/1 piece	Order code*	PN (bar)[1]) Steel	71
LL[2])	04	G 1/8 A	3.0	4.5	15		15	11.3	20	7.1	21	12	14	10	27	**WEE04LLROMD**	100	
	06	G 1/8 A	4.5	4.5	15		15	11.3	20	7.1	21	12	14	12	27	**WEE06LLROMD**	100	
L[3])	06	G 1/8 A	4.0	4.5	15	15.0	21	14.0	19	7.0	29	14	14	14	40	**WEE06LROMD**	315	315
	08	G 1/4 A	6.0	7.5	20	19.5	23	16.0	23	9.0	31	14	19	17	59	**WEE08LROMD**	315	315
	10	G 1/4 A	8.0	7.5	20	19.5	24	17.0	25	9.0	32	19	19	19	82	**WEE10LROMD**	315	315
	12	G 3/8 A	10.0	10.0	23	23.5	26	19.0	28	9.0	34	19	22	22	96	**WEE12LROMD**	250	250
	15	G 1/2 A	12.0	12.5	28	28.5	28	21.0	30	13.0	36	22	27	27	149	**WEE15LROMD**	250	250
	18	G 1/2 A	15.0	12.5	28	28.5	31	24.0	36	13.0	40	27	27	32	221	**WEE18LROMD**	250	250
	22	G 3/4 A	19.0	15.5	33	34.5	35	28.0	36	13.0	44	30	36	36	310	**WEE22LROMD**	160	160
	28	G 1 A	24.0	21.5	41	43.5	38	31.0	44	15.0	47	36	41	41	455	**WEE28LROMD**	160	160
	35	G 1 1/4 A	30.0	27.5	51	52.5	48	38.0	50	15.0	59	50	50	50	1043	**WEE35LROMD**	160	160
	42	G 1 1/2 A	36.0	33.0	56	60.0	49	38.0	52	15.0	61	50	55	60	994	**WEE42LROMD**	160	160
S[4])	06	G 1/4 A	4.0	7.5	20	19.5	22	15.0	23	9.0	30	14	19	17	56	**WEE06SROMD**	315	315
	08	G 1/4 A	5.0	7.5	20	19.5	24	17.0	27	9.0	32	19	19	19	88	**WEE08SROMD**	315	315
	10	G 3/8 A	7.0	10.0	23	23.5	25	18.0	29	9.0	34	19	22	22	98	**WEE10SROMD**	250	250
	12	G 3/8 A	8.0	10.0	23	23.5	29	22.0	29	9.0	38	22	22	24	128	**WEE12SROMD**	250	250
	16	G 1/2 A	12.0	12.5	28	28.5	33	25.0	36	13.0	43	27	27	30	234	**WEE16SROMD**	250	250
	20	G 3/4 A	16.0	15.5	33	34.5	38	28.0	39	12.0	49	30	36	36	344	**WEE20SROMD**	250	250
	25	G 1 A	20.0	21.5	41	43.5	42	30.0	44	14.0	54	36	41	46	533	**WEE25SROMD**	250	250
	30	G 1 1/4 A	25.0	27.5	51	52.5	49	36.0	49	15.0	62	50	50	50	1085	**WEE30SROMD**	160	160
	38	G 1 1/2 A	32.0	33.0	56	60.0	50	34.0	55	15.0	65	50	55	60	1116	**WEE38SROMD**	160	160

[1]) Pressure shown = item deliverable

[2]) LL = very light series; [3]) L = light series; [4]) S = heavy series

$\frac{\text{PN (bar)}}{10}$ = PN (MPa)

Delivery without nut and ring. Information on ordering complete fittings or alternative sealing materials see page I7.

[5]) Steel; [6]) Stainless Steel

*Please add the **suffixes** below according to the material/surface required.

Order code suffixes			
Material	Suffix surface and material	Example	Standard sealing material (no additonal. suffix needed)
Steel	CF	WEE16SROMDCF	NBR
Stainless Steel	71	WEE16SRBOMD71	VIT

KOMI.CZ

Adjustable locknut elbow, branch tee, run tee or 45° elbow

On customer request!

WEE Adjustable locknut elbow
EO 24° cone end/Adjustable thread

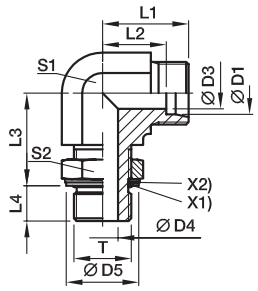

T	Order code	Surface
metric thread – O-ring + retaining ring	WEE…MOMD	CF
metric thread – O-ring (ISO 6149)	WEE…MOROMD	CF
UN/UNF thread – O-ring (ISO 11926)	WEE…UNFOMD	CF

TEE Adjustable locknut branch tee
EO 24° cone end/Adjustable thread

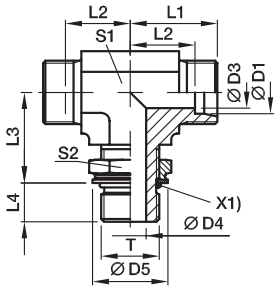

T	Order code	Surface
metric thread – O-ring + retaining ring	TEE…MOMD	CF
metric thread – O-ring (ISO 6149)	TEE…MOROMD	CF
UN/UNF thread – O-ring (ISO 11926)	TEE…UNFOMD	CF
BSPP thread – O-ring + retaining ring (ISO 1179)	TEE…ROMD	CF

LEE Adjustable locknut run tee
EO 24° cone end/Adjustable thread

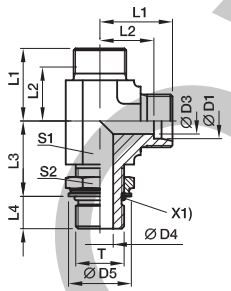

T	Order code	Surface
metric thread – O-ring + retaining ring	LEE…MOMD	CF
metric thread – O-ring (ISO 6149)	LEE…MOROMD	CF
UN/UNF thread – O-ring (ISO 11926)	LEE…UNFOMD	CF
BSPP thread – O-ring + retaining ring (ISO 1179)	LEE…ROMD	CF

VEE Adjustable locknut 45° elbow
EO 24° cone end/Adjustable thread

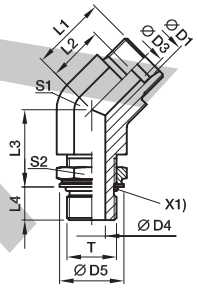

T	Order code	Surface
metric thread – O-ring + retaining ring	VEE…MOMD	CF
metric thread – O-ring (ISO 6149)	VEE…MOROMD	CF
UN/UNF thread – O-ring (ISO 11926)	VEE…UNFOMD	CF
BSPP thread – O-ring + retaining ring (ISO 1179)	VEE…ROMD	CF

KOVAZ.CZ

WHK-M-CS High pressure banjo elbow

EO 24° cone end / Male metric thread with soft seal ring

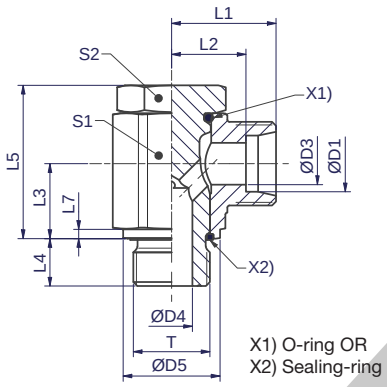

X1) O-ring OR
X2) Sealing-ring

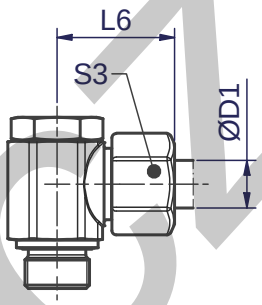

Series	D1	T	D3	D4	D5	L1	L2	L3	L4	L5	L6	L7	S1	S2	S3	Weight g/1 piece	Order code*	PN (bar)[1] Steel
LL[2]	04	M 08×1.0	3.0	3.0	12.5	14.8	10.6	8.0	7.7	17.0	20.3	1.15	12.0	12.0	10.0	19	**WHK04LLMCSOMD**	100
	06	M 10×1.0	4.5	4.5	14.8	15.8	10.1	10.0	7.7	22.0	21.8	1.15	14.0	13.0	12.0	32	**WHK06LLMCSOMD**	100
	08	M 10×1.0	6.0	4.5	14.8	16.8	11.1	10.0	7.7	22.0	22.8	1.15	14.0	13.0	14.0	35	**WHK08LLMCSOMD**	100
L[3]	06	M 10×1.0	4.0	4.5	14.8	17.5	10.4	10.0	7.7	22.0	25.0	1.15	14.0	13.0	14.0	35	**WHK06LMCSOMD**	400
	08	M 12×1.5	6.0	5.5	17.8	19.6	12.5	12.0	11.5	26.5	26.8	1.65	19.0	17.0	17.0	66	**WHK08LMCSOMD**	420
	10	M 14×1.5	8.0	6.0	19.8	21.3	14.1	13.0	11.5	27.5	28.8	1.65	19.0	17.0	19.0	74	**WHK10LMCSOMD**	420
	12	M 16×1.5	10.0	7.5	22.8	23.3	16.1	16.0	11.5	34.0	30.8	1.65	24.0	22.0	22.0	133	**WHK12LMCSOMD**	420
	15	M 18×1.5	12.0	9.0	24.8	26.0	18.9	18.0	11.5	38.0	34.0	2.15	27.0	24.0	27.0	182	**WHK15LMCSOMD**	420
	18	M 22×1.5	15.0	12.0	27.8	28.3	20.6	21.5	13.6	44.0	36.8	2.65	30.0	27.0	32.0	266	**WHK18LMCSOMD**	350
	22	M 26×1.5	19.0	17.0	32.8	33.0	25.4	24.0	15.5	50.5	41.5	2.65	36.0	32.0	36.0	403	**WHK22LMCSOMD**	350
	28	M 33×2.0	24.0	21.0	40.8	39.4	31.7	30.5	17.5	62.0	48.4	2.65	46.0	41.0	41.0	773	**WHK28LMCSOMD**	250
	35	M 42×2.0	30.0	27.0	50.8	46.4	35.7	35.5	19.6	74.0	57.4	2.65	60.0	50.0	50.0	1465	**WHK35LMCSOMD**	250
	42	M 48×2.0	36.0	34.0	55.8	51.4	40.2	40.5	21.6	83.5	62.9	2.65	65.0	55.0	60.0	1890	**WHK42LMCSOMD**	250
S[4]	06	M 12×1.5	4.0	5.5	17.8	22.3	15.1	12.0	11.5	26.5	29.8	1.65	19.0	17.0	17.0	75	**WHK06SMCSOMD**	420
	08	M 14×1.5	5.0	6.0	19.8	22.3	15.1	13.0	11.5	27.5	29.8	1.65	19.0	17.0	19.0	84	**WHK08SMCSOMD**	420
	10	M 16×1.5	7.0	7.5	22.8	23.8	16.1	16.0	11.5	34.0	32.3	1.65	24.0	22.0	22.0	138	**WHK10SMCSOMD**	420
	12	M 18×1.5	8.0	9.0	24.8	26.0	18.4	18.0	11.5	38.0	34.5	2.15	27.0	24.0	24.0	184	**WHK12SMCSOMD**	420
	16	M 22×1.5	12.0	12.0	27.8	30.0	21.4	21.5	13.6	44.0	39.5	2.65	30.0	27.0	30.0	271	**WHK16SMCSOMD**	350
	20	M 27×2.0	16.0	16.0	32.8	35.0	24.4	24.0	15.5	50.5	46.0	2.65	36.0	32.0	36.0	429	**WHK20SMCSOMD**	350
	25	M 33×2.0	20.0	21.0	40.8	43.4	31.2	30.5	17.5	62.0	55.4	2.65	46.0	41.0	46.0	803	**WHK25SMCSOMD**	250
	30	M 42×2.0	25.0	27.0	50.8	50.5	36.9	35.5	19.6	74.0	63.5	2.65	60.0	50.0	50.0	1500	**WHK30SMCSOMD**	250
	38	M 48×2.0	32.0	34.0	55.8	57.5	41.4	40.5	21.6	83.5	72.0	2.65	65.0	55.0	60.0	1971	**WHK38SMCSOMD**	250

[1]) Pressure shown = item deliverable

[2]) LL = very light series; [3]) L = light series; [4]) S = heavy series

$\frac{\text{PN (bar)}}{10}$ = PN (MPa)

Delivery without nut and ring. Information on ordering complete fittings or alternative sealing materials see page I7.

*Please add the **suffixes** below according to the material/surface required.

Order code suffixes			
Material	Suffix surface and material	Example	Standard sealing material (no additonal. suffix needed)
Steel	CF	WHK16SMCSOMDCF	NBR FKM on request

KOMAC

WHK-M High pressure banjo elbow

EO 24° cone end / Male metric thread with metal sealing

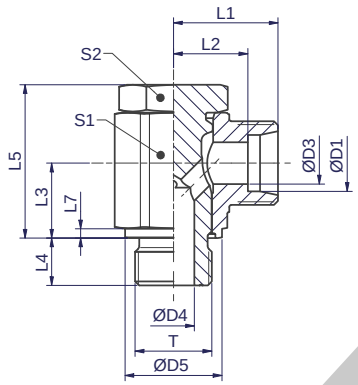

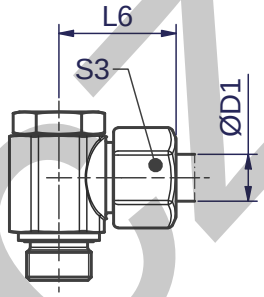

Series	D1	T	D3	D4	D5	L1	L2	L3	L4	L5	L6	L7	S1	S2	S3	Weight g/1 piece	Order code*	PN (bar)[1] Steel
LL[2]	04	M 08×1.0	3.0	3.0	12.5	14.8	10.6	8.0	7.7	17.0	20.3	1.15	12.0	12.0	10.0	19	**WHK04LLMOMD**	100
	06	M 10×1.0	4.5	4.5	14.8	15.8	10.1	10.0	7.7	22.0	21.8	1.15	14.0	13.0	12.0	32	**WHK06LLMOMD**	100
	08	M 10×1.0	6.0	4.5	14.8	16.8	11.1	10.0	7.7	22.0	22.8	1.15	14.0	13.0	14.0	35	**WHK08LLMOMD**	100
L[3]	06	M 10×1.0	4.0	4.5	14.8	17.5	10.4	10.0	7.7	22.0	25.0	1.15	14.0	13.0	14.0	35	**WHK06LMOMD**	250
	08	M 12×1.5	6.0	5.5	17.8	19.6	12.5	12.0	11.5	26.5	26.8	1.65	19.0	17.0	17.0	66	**WHK08LMOMD**	250
	10	M 14×1.5	8.0	6.0	19.8	21.3	14.1	13.0	11.5	27.5	28.8	1.65	19.0	17.0	19.0	74	**WHK10LMOMD**	250
	12	M 16×1.5	10.0	7.5	22.8	23.3	16.1	16.0	11.5	34.0	30.8	1.65	24.0	22.0	22.0	133	**WHK12LMOMD**	250
	15	M 18×1.5	12.0	9.0	24.8	26.0	18.9	18.0	11.5	38.0	34.0	2.15	27.0	24.0	27.0	182	**WHK15LMOMD**	250
	18	M 22×1.5	15.0	12.0	27.8	28.3	20.6	21.5	13.6	44.0	36.8	2.65	30.0	27.0	32.0	266	**WHK18LMOMD**	250
	22	M 26×1.5	19.0	17.0	32.8	33.0	25.4	24.0	15.5	50.5	41.5	2.65	36.0	32.0	36.0	403	**WHK22LMOMD**	160
	28	M 33×2.0	24.0	21.0	40.8	39.4	31.7	30.5	17.5	62.0	48.4	2.65	46.0	41.0	41.0	773	**WHK28LMOMD**	160
	35	M 42×2.0	30.0	27.0	50.8	46.4	35.7	35.5	19.6	74.0	57.4	2.65	60.0	50.0	50.0	1465	**WHK35LMOMD**	160
	42	M 48×2.0	36.0	34.0	55.8	51.4	40.2	40.5	21.6	83.5	62.9	2.65	65.0	55.0	60.0	1890	**WHK42LMOMD**	160
S[4]	06	M 12×1.5	4.0	5.5	17.8	22.3	15.1	12.0	11.5	26.5	29.8	1.65	19.0	17.0	17.0	75	**WHK06SMOMD**	315
	08	M 14×1.5	5.0	6.0	19.8	22.3	15.1	13.0	11.5	27.5	29.8	1.65	19.0	17.0	19.0	84	**WHK08SMOMD**	315
	10	M 16×1.5	7.0	7.5	22.8	23.8	16.1	16.0	11.5	34.0	32.3	1.65	24.0	22.0	22.0	138	**WHK10SMOMD**	315
	12	M 18×1.5	8.0	9.0	24.8	26.0	18.4	18.0	11.5	38.0	34.5	2.15	27.0	24.0	24.0	184	**WHK12SMOMD**	315
	16	M 22×1.5	12.0	12.0	27.8	30.0	21.4	21.5	13.6	44.0	39.5	2.65	30.0	27.0	30.0	271	**WHK16SMOMD**	315
	20	M 27×2.0	16.0	16.0	32.8	35.0	24.4	24.0	15.5	50.5	46.0	2.65	36.0	32.0	36.0	429	**WHK20SMOMD**	160
	25	M 33×2.0	20.0	21.0	40.8	43.4	31.2	30.5	17.5	62.0	55.4	2.65	46.0	41.0	46.0	803	**WHK25SMOMD**	160
	30	M 42×2.0	25.0	27.0	50.8	50.5	36.9	35.5	19.6	74.0	63.5	2.65	60.0	50.0	50.0	1500	**WHK30SMOMD**	160
	38	M 48×2.0	32.0	34.0	55.8	57.5	41.4	40.5	21.6	83.5	72.0	2.65	65.0	55.0	60.0	1971	**WHK38SMOMD**	160

[1]) Pressure shown = item deliverable

[2]) LL = very light series; [3]) L = light series; [4]) S = heavy series

$\frac{\text{PN (bar)}}{10}$ = PN (MPa)

Delivery without nut and ring. Information on ordering complete fittings or alternative sealing materials see page I7.

*Please add the **suffixes** below according to the material/surface required.

Order code suffixes			
Material	Suffix surface and material	Example	Standard sealing material (no additonal. suffix needed)
Steel	CF	WHK16SMOMDCF	

KOMAT

WHK-R-CS High pressure banjo elbow

EO 24° cone end / Male BSPP thread with soft seal ring

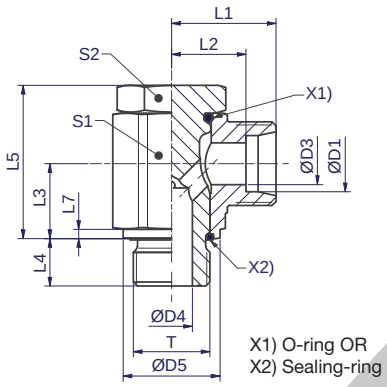

X1) O-ring OR
X2) Sealing-ring

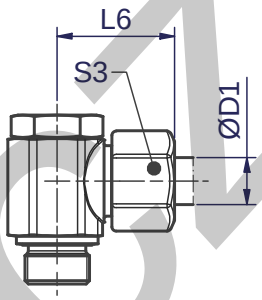

Series	D1	T	D3	D4	D5	L1	L2	L3	L4	L5	L6	L7	S1	S2	S3	Weight g/1 piece	Order code*	PN (bar)[1] Steel
LL[2]	04	G 1/8 A	3.0	4.5	14.8	15.8	11.6	10.0	8.0	22.0	21.3	1.15	14.0	13.0	10.0	31	**WHK04LLRCSOMD**	100
	06	G 1/8 A	4.5	4.5	14.8	15.8	10.1	10.0	8.0	22.0	21.8	1.15	14.0	13.0	12.0	32	**WHK06LLRCSOMD**	100
	08	G 1/8 A	6.0	4.5	14.8	16.8	11.1	10.0	8.0	22.0	22.8	1.15	14.0	13.0	14.0	35	**WHK08LLRCSOMD**	100
L[3]	06	G 1/8 A	4.0	4.5	14.8	17.5	10.4	10.0	8.0	22.0	25.0	1.15	14.0	13.0	14.0	35	**WHK06LRCSOMD**	400
	08	G 1/4 A	6.0	6.0	19.8	20.3	13.1	13.0	11.5	27.5	26.8	1.65	19.0	17.0	17.0	70	**WHK08LRCSOMD**	420
	10	G 1/4 A	8.0	6.0	19.8	21.3	14.1	13.0	11.5	27.5	28.8	1.65	19.0	17.0	19.0	73	**WHK10LRCSOMD**	420
	12	G 3/8 A	10.0	7.5	22.8	23.3	16.1	16.0	11.5	34.0	30.8	2.15	24.0	22.0	22.0	135	**WHK12LRCSOMD**	420
	15	G 1/2 A	12.0	12.0	27.8	27.5	20.4	21.5	14.0	44.0	35.5	2.65	30.0	27.0	27.0	254	**WHK15LRCSOMD**	350
	18	G 1/2 A	15.0	12.0	27.8	28.3	20.6	21.5	14.0	44.0	36.8	2.65	30.0	27.0	32.0	260	**WHK18LRCSOMD**	350
	22	G 3/4 A	19.0	16.0	32.8	33.0	25.4	24.0	15.5	50.5	41.5	2.65	36.0	32.0	36.0	413	**WHK22LRCSOMD**	350
	28	G 1 A	24.0	21.0	40.8	39.4	31.7	30.5	18.0	62.0	48.4	2.65	46.0	41.0	41.0	772	**WHK28LRCSOMD**	250
	35	G 1 1/4 A	30.0	27.0	50.8	46.4	35.7	35.5	19.6	74.0	57.4	2.65	60.0	50.0	50.0	1462	**WHK35LRCSOMD**	250
	42	G 1 1/2 A	36.0	34.0	55.8	51.4	40.2	40.5	21.6	83.5	62.9	2.65	65.0	55.0	60.0	1884	**WHK42LRCSOMD**	250
S[4]	06	G 1/4 A	4.0	6.0	19.8	22.3	15.1	13.0	11.5	27.5	29.8	1.65	19.0	17.0	17.0	79	**WHK06SRCSOMD**	420
	08	G 1/4 A	5.0	6.0	19.8	22.3	15.1	13.0	11.5	27.5	29.8	1.65	19.0	17.0	19.0	83	**WHK08SRCSOMD**	420
	10	G 3/8 A	7.0	7.5	22.8	23.8	16.1	16.0	11.5	34.0	32.3	2.15	24.0	22.0	22.0	140	**WHK10SRCSOMD**	420
	12	G 3/8 A	8.0	7.5	22.8	23.8	16.1	16.0	11.5	34.0	32.3	2.15	24.0	22.0	24.0	143	**WHK12SRCSOMD**	420
	16	G 1/2 A	12.0	12.0	27.8	30.0	21.4	21.5	14.0	44.0	39.5	2.65	30.0	27.0	30.0	266	**WHK16SRCSOMD**	350
	20	G 3/4 A	16.0	16.0	32.8	35.0	24.4	24.0	15.5	50.5	46.0	2.65	36.0	32.0	36.0	427	**WHK20SRCSOMD**	350
	25	G 1 A	20.0	21.0	40.8	43.4	31.2	30.5	18.0	62.0	55.4	2.65	46.0	41.0	46.0	802	**WHK25SRCSOMD**	250
	30	G 1 1/4 A	25.0	27.0	50.8	50.5	36.9	35.5	19.6	74.0	63.5	2.65	60.0	50.0	50.0	1497	**WHK30SRCSOMD**	250
	38	G 1 1/2 A	32.0	34.0	55.8	57.5	41.4	40.5	21.6	83.5	72.0	2.65	65.0	55.0	60.0	1965	**WHK38SRCSOMD**	250

[1]) Pressure shown = item deliverable

[2]) LL = very light series; [3]) L = light series; [4]) S = heavy series

$\frac{\text{PN (bar)}}{10}$ = PN (MPa)

Delivery without nut and ring. Information on ordering complete fittings or alternative sealing materials see page I7.

*Please add the **suffixes** below according to the material/surface required.

Order code suffixes			
Material	Suffix surface and material	Example	Standard sealing material (no additonal. suffix needed)
Steel	CF	WHK16SRCSOMDCF	NBR FKM on request

KOMAC

WHK-R High pressure banjo elbow

EO 24° cone end / Male BSPP thread with metal sealing

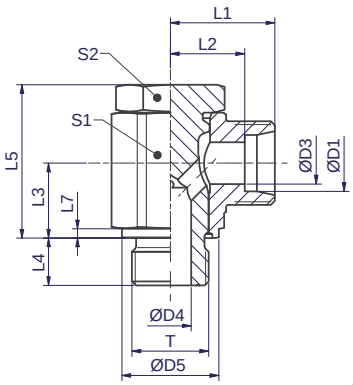

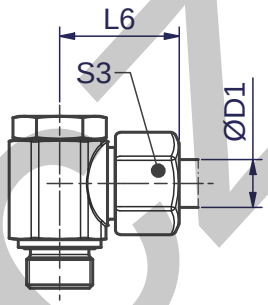

Series	D1	T	D3	D4	D5	L1	L2	L3	L4	L5	L6	L7	S1	S2	S3	Weight g/1 piece	Order code*	PN (bar)[1] Steel
LL[2]	04	G 1/8 A	3.0	4.5	14.8	15.8	11.6	10.0	8.0	22.0	21.3	1.15	14.0	13.0	10.0	31	**WHK04LLROMD**	100
	06	G 1/8 A	4.5	4.5	14.8	15.8	10.1	10.0	8.0	22.0	21.8	1.15	14.0	13.0	12.0	32	**WHK06LLROMD**	100
	08	G 1/8 A	6.0	4.5	14.8	16.8	11.1	10.0	8.0	22.0	22.8	1.15	14.0	13.0	14.0	35	**WHK08LLROMD**	100
L[3]	06	G 1/8 A	4.0	4.5	14.8	17.5	10.4	10.0	8.0	22.0	25.0	1.15	14.0	13.0	14.0	35	**WHK06LROMD**	250
	08	G 1/4 A	6.0	6.0	19.8	20.3	13.1	13.0	11.5	27.5	26.8	1.65	19.0	17.0	17.0	70	**WHK08LROMD**	250
	10	G 1/4 A	8.0	6.0	19.8	21.3	14.1	13.0	11.5	27.5	28.8	1.65	19.0	17.0	19.0	73	**WHK10LROMD**	250
	12	G 3/8 A	10.0	7.5	22.8	23.3	16.1	16.0	11.5	34.0	30.8	2.15	24.0	22.0	22.0	135	**WHK12LROMD**	250
	15	G 1/2 A	12.0	12.0	27.8	27.5	20.4	21.5	14.0	44.0	35.5	2.65	30.0	27.0	27.0	254	**WHK15LROMD**	250
	18	G 1/2 A	15.0	12.0	27.8	28.3	20.6	21.5	14.0	44.0	36.8	2.65	30.0	27.0	32.0	260	**WHK18LROMD**	250
	22	G 3/4 A	19.0	16.0	32.8	33.0	25.4	24.0	15.5	50.5	41.5	2.65	36.0	32.0	36.0	413	**WHK22LROMD**	160
	28	G 1 A	24.0	21.0	40.8	39.4	31.7	30.5	18.0	62.0	48.4	2.65	46.0	41.0	41.0	772	**WHK28LROMD**	160
	35	G 1 1/4 A	30.0	27.0	50.8	46.4	35.7	35.5	19.6	74.0	57.4	2.65	60.0	50.0	50.0	1462	**WHK35LROMD**	160
	42	G 1 1/2 A	36.0	34.0	55.8	51.4	40.2	40.5	21.6	83.5	62.9	2.65	65.0	55.0	60.0	1884	**WHK42LROMD**	160
S[4]	06	G 1/4 A	4.0	6.0	19.8	22.3	15.1	13.0	11.5	27.5	29.8	1.65	19.0	17.0	17.0	79	**WHK06SROMD**	315
	08	G 1/4 A	5.0	6.0	19.8	22.3	15.1	13.0	11.5	27.5	29.8	1.65	19.0	17.0	19.0	83	**WHK08SROMD**	315
	10	G 3/8 A	7.0	7.5	22.8	23.8	16.1	16.0	11.5	34.0	32.3	2.15	24.0	22.0	22.0	140	**WHK10SROMD**	315
	12	G 3/8 A	8.0	7.5	22.8	23.8	16.1	16.0	11.5	34.0	32.3	2.15	24.0	22.0	24.0	143	**WHK12SROMD**	315
	16	G 1/2 A	12.0	12.0	27.8	30.0	21.4	21.5	14.0	44.0	39.5	2.65	30.0	27.0	30.0	266	**WHK16SROMD**	315
	20	G 3/4 A	16.0	16.0	32.8	35.0	24.4	24.0	15.5	50.5	46.0	2.65	36.0	32.0	36.0	427	**WHK20SROMD**	160
	25	G 1 A	20.0	21.0	40.8	43.5	31.2	30.5	18.0	62.0	55.4	2.65	46.0	41.0	46.0	802	**WHK25SROMD**	160
	30	G 1 1/4 A	25.0	27.0	50.8	50.5	36.9	35.5	19.6	74.0	63.5	2.65	60.0	50.0	50.0	1497	**WHK30SROMD**	160
	38	G 1 1/2 A	32.0	34.0	55.8	57.5	41.4	40.5	21.6	83.5	72.0	2.65	65.0	55.0	60.0	1965	**WHK38SROMD**	160

[1]) Pressure shown = item deliverable

[2]) LL = very light series; [3]) L = light series; [4]) S = heavy series

$\frac{\text{PN (bar)}}{10}$ = PN (MPa)

Delivery without nut and ring. Information on ordering complete fittings or alternative sealing materials see page I7.

*Please add the **suffixes** below according to the material/surface required

Order code suffixes			
Material	Suffix surface and material	Example	Standard sealing material (no additonal. suffix needed)
Steel	CF	WHK16SROMDCF	

KOMAK

WH-M-KD (71) High pressure banjo elbow

EO 24° cone end / Male metric thread with soft seal ring

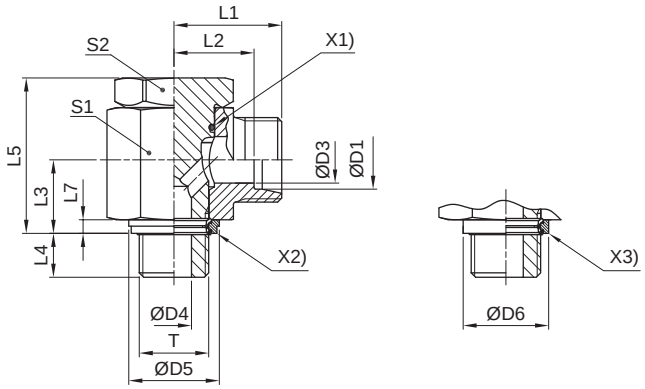

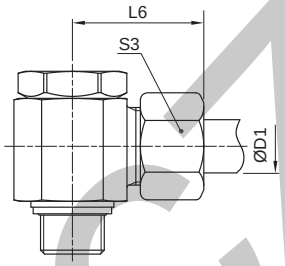

X1) O-ring OR
X2) Sealing ring KDS (for aports with small spot face, ISO 9974)
X3) Sealing ring KD (for ports with wide spot face, ISO 9974)

Series	D1	T	D3	D4	D5 KDS	D6 KD	L1	L2	L3	L4	L5	L6	L7	S1	S2	S3	Weight g/1 piece	Order code*	PN (bar)[1] 71
L[3])	06	M 10×1.0	4	4.5	14.9	17.0	19.0	12.0	10.5	8	24.0	27	2.5	17	17	14	54	**WH06LMKDOMD**	315
	08	M 12×1.5	6	6.0	17.0	22.0	21.5	14.5	14.0	12	30.0	29	3.0	22	19	17	97	**WH08LMKDOMD**	315
	10	M 14×1.5	8	6.0	18.9	22.5	22.5	15.5	14.0	12	30.0	30	3.0	22	19	19	104	**WH10LMKDOMD**	315
	12	M 16×1.5	10	7.5	21.9	27.0	25.0	18.0	16.5	12	36.0	33	3.0	27	24	22	180	**WH12LMKDOMD**	315
	15	M 18×1.5	11	9.0	23.9	29.0	27.5	21.5	18.5	12	39.5	37	3.0	30	27	27	244	**WH15LMKDOMD**	315
	18	M 22×1.5	15	12.0	26.9	32.0	28.5	21.0	21.5	14	45.0	37	4.5	32	30	32	327	**WH18LMKDOMD**	315
	22	M 26×1.5	19	17.0	31.9	41.0	35.0	27.5	24.0	16	53.0	44	3.5	41	36	36	573	**WH22LMKDOMD**	160
	28	M 33×2.0	24	21.0	39.9	46.0	39.5	32.0	30.5	18	66.0	49	3.5	50	46	41	1017	**WH28LMKDOMD**	160
	35	M 42×2.0	30	27.0	49.9	57.0	46.5	36.0	35.5	20	76.0	58	3.5	60	55	50	1512	**WH35LMKDOMD**	160
	42	M 48×2.0	36	34.0	55.9	64.0	51.5	40.5	40.5	22	87.0	63	3.5	70	60	60	2217	**WH42LMKDOMD**	160
S[4])	06	M 12×1.5	4	6.0	17.0	22.0	23.5	16.5	14.0	12	30.0	31	3.0	22	19	17	104	**WH06SMKDOMD**	400
	08	M 14×1.5	5	6.0	18.9	22.5	23.5	16.5	14.0	12	30.0	31	3.0	22	19	19	110	**WH08SMKDOMD**	400
	10	M 16×1.5	7	7.5	21.9	27.0	26.0	18.5	16.5	12	36.0	35	3.0	27	24	22	186	**WH10SMKDOMD**	400
	12	M 18×1.5	8	9.0	23.9	29.0	27.5	20.0	18.5	12	39.5	36	3.0	30	27	24	246	**WH12SMKDOMD**	400
	16	M 22×1.5	12	12.0	26.9	32.0	30.5	22.0	21.5	14	45.0	40	4.5	32	30	30	327	**WH16SMKDOMD**	315
	20	M 27×2.0	16	16.0	32.9	41.0	37.0	26.5	24.0	16	53.0	48	3.5	41	36	36	598	**WH20SMKDOMD**	315
	25	M 33×2.0	20	21.0	39.9	46.0	43.5	31.5	30.5	18	66.0	56	3.5	50	46	46	1055	**WH25SMKDOMD**	250
	30	M 42×2.0	25	27.0	49.9	57.0	50.5	37.0	35.5	20	76.0	64	3.5	60	55	50	1572	**WH30SMKDOMD**	160
	38	M 48×2.0	32	34.0	55.9	64.0	57.5	41.5	40.5	22	87.0	72	3.5	70	60	60	2317	**WH38SMKDOMD**	160

[1]) Pressure shown = item deliverable

[3]) L = light series; [4]) S = heavy series

$\frac{\text{PN (bar)}}{10}$ = PN (MPa)

Delivery without nut and ring. Information on ordering complete fittings or alternative sealing materials see page I7.

*Please add the **suffixes** below according to the material/surface required.

Order code suffixes			
Material	Suffix surface and material	Example	Standard sealing material (no additonal. suffix needed)
Stainless Steel	71	WH16SMKDOMD71	VIT/PTFE

KOVAZ.cz

WH-M (71) High pressure banjo elbow

EO 24° cone end / Male metric thread with metal sealing ring

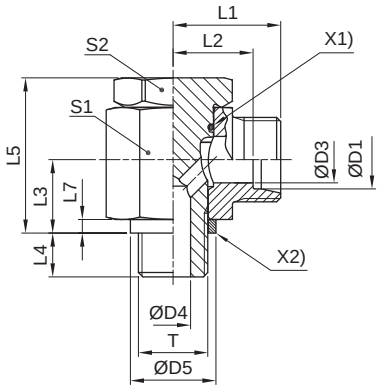

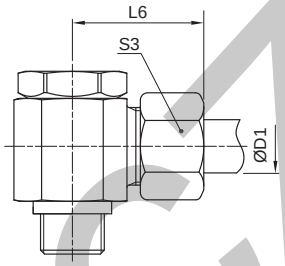

X1) O-ring OR
X2) Sealing ring DKA

Series	D1	T	D3	D4	D5	L1	L2	L3	L4	L5	L6	L7	S1	S2	S3	Weight g/1 piece	Order code*	PN (bar)[1] 71
L[3]	06	M 10×1.0	4	4.5	14	19.0	12.0	10.5	8	24.0	27	2.5	17	17	14	54	**WH06LM0MD**	250
	08	M 12×1.5	6	6.0	17	21.5	14.5	14.0	12	30.0	29	3.0	22	19	17	97	**WH08LM0MD**	250
	10	M 14×1.5	8	6.0	19	22.5	15.5	14.0	12	30.0	30	3.0	22	19	19	104	**WH10LM0MD**	250
	12	M 16×1.5	10	7.5	21	25.0	18.0	16.5	12	36.0	33	3.0	27	24	22	180	**WH12LM0MD**	250
	15	M 18×1.5	11	9.0	23	27.5	21.5	18.5	12	39.5	37	3.0	30	27	27	243	**WH15LM0MD**	250
	18	M 22×1.5	15	12.0	27	28.5	21.0	21.5	14	45.0	37	4.5	32	30	32	326	**WH18LM0MD**	250
	22	M 26×1.5	19	17.0	31	35.0	27.5	24.0	16	53.0	44	3.5	41	36	36	574	**WH22LM0MD**	160
	28	M 33×2.0	24	21.0	39	39.5	32.0	30.5	18	66.0	49	3.5	50	46	41	1016	**WH28LM0MD**	160
	35	M 42×2.0	30	27.0	49	46.5	36.0	35.5	20	76.0	58	3.5	60	55	50	1512	**WH35LM0MD**	160
	42	M 48×2.0	36	34.0	55	51.5	40.5	40.5	22	87.0	63	3.5	70	60	60	2216	**WH42LM0MD**	160
S[4]	06	M 12×1.5	4	6.0	17	23.5	16.5	14.0	12	30.0	31	3.0	22	19	17	104	**WH06SM0MD**	315
	08	M 14×1.5	5	6.0	19	23.5	16.5	14.0	12	30.0	31	3.0	22	19	19	111	**WH08SM0MD**	315
	10	M 16×1.5	7	7.5	21	26.0	18.5	16.5	12	36.0	35	3.0	27	24	22	186	**WH10SM0MD**	315
	12	M 18×1.5	8	9.0	23	27.5	20.0	18.5	12	39.5	36	3.0	30	27	24	246	**WH12SM0MD**	315
	16	M 22×1.5	12	12.0	27	30.5	22.0	21.5	14	45.0	40	4.5	32	30	30	326	**WH16SM0MD**	315
	20	M 27×2.0	16	16.0	32	37.0	26.5	24.0	16	53.0	48	3.5	41	36	36	596	**WH20SM0MD**	160
	25	M 33×2.0	20	21.0	39	43.5	31.5	30.5	18	66.0	56	3.5	50	46	46	1055	**WH25SM0MD**	160
	30	M 42×2.0	25	27.0	49	50.5	37.0	35.5	20	76.0	64	3.5	60	55	50	1572	**WH30SM0MD**	160
	38	M 48×2.0	32	34.0	55	57.5	41.5	40.5	22	87.0	72	3.5	70	60	60	2316	**WH38SM0MD**	160

[1]) Pressure shown = item deliverable

[3]) L = light series; [4]) S = heavy series

$\frac{\text{PN (bar)}}{10}$ = PN (MPa)

Delivery without nut and ring. Information on ordering complete fittings or alternative sealing materials see page I7.

*Please add the **suffixes** below according to the material/surface required.

Order code suffixes			
Material	Suffix surface and material	Example	Standard sealing material (no additonal. suffix needed)
Stainless Steel	71	WH16SMOMD71	VIT

KOVAZ.CZ

WH-R-KD (71) High pressure banjo elbow

EO 24° cone end / Male BSPP thread with soft seal ring

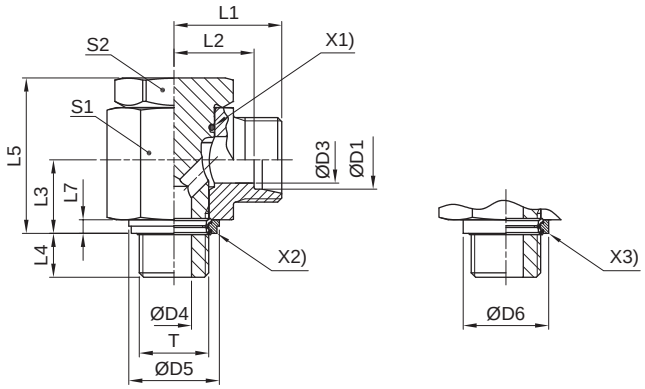

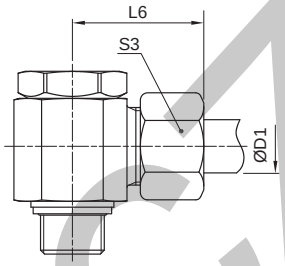

X1) O-ring OR
X2) Sealing ring KDS (for ports with small spot face, ISO 1179)
X3) Sealing ring KD (for ports with wide spot face, ISO 1179)

Series	D1	T	D3	D4	D5 KDS	D6 KD	L1	L2	L3	L4	L5	L6	L7	S1	S2	S3	Weight g/1 piece	Order code*	PN (bar)[1] 71
L[3]	06	G 1/8 A	4	4.5	14.9	17	19.0	12.0	10.5	8	24	27	2.5	17	17	14	53	**WH06LRKDOMD**	315
	08	G 1/4 A	6	6.0	18.9	22	21.5	14.5	14.0	12	30	29	3.0	22	19	17	101	**WH08LRKDOMD**	315
	10	G 1/4 A	8	6.0	18.9	22	22.5	15.5	14.0	12	30	30	3.0	22	19	19	102	**WH10LRKDOMD**	315
	12	G 3/8 A	10	7.5	21.9	27	25.0	18.0	16.5	12	36	33	3.0	27	24	22	181	**WH12LRKDOMD**	315
	15	G 1/2 A	12	11.0	26.9	32	28.5	21.5	21.5	14	45	37	4.5	32	30	27	312	**WH15LRKDOMD**	315
	18	G 1/2 A	15	11.0	26.9	32	28.5	21.0	21.5	14	45	37	4.5	32	30	32	319	**WH18LRKDOMD**	315
	22	G 3/4 A	19	17.0	32.9	41	35.0	27.5	24.0	16	53	44	3.5	41	36	36	578	**WH22LRKDOMD**	160
	28	G 1 A	24	21.0	39.9	46	39.5	32.0	30.5	18	66	49	3.5	50	46	41	1035	**WH28LRKDOMD**	160
	35	G 1 1/4 A	30	27.0	49.9	57	46.5	36.0	35.5	20	76	58	3.5	60	55	50	1499	**WH35LRKDOMD**	160
	42	G 1 1/2 A	36	34.0	55.9	64	51.5	40.5	40.5	22	87	63	3.5	70	60	60	2196	**WH42LRKDOMD**	160
S[4]	06	G 1/4 A	4	6.0	18.9	22	23.5	16.5	14.0	12	30	31	3.0	22	19	17	107	**WH06SRKDOMD**	400
	08	G 1/4 A	5	6.0	18.9	22	23.5	16.5	14.0	12	30	31	3.0	22	19	19	107	**WH08SRKDOMD**	400
	10	G 3/8 A	7	7.5	21.9	27	26.0	18.5	16.5	12	36	35	3.0	27	24	22	188	**WH10SRKDOMD**	400
	12	G 3/8 A	8	7.5	21.9	27	26.0	18.5	16.5	12	36	35	3.0	30	24	24	190	**WH12SRKDOMD**	400
	16	G 1/2 A	12	11.0	26.9	32	30.5	22.0	21.5	14	45	40	4.5	32	30	30	324	**WH16SRKDOMD**	315
	20	G 3/4 A	16	17.0	32.9	41	37.0	26.5	24.0	16	53	48	3.5	41	36	36	588	**WH20SRKDOMD**	315
	25	G 1 A	20	21.0	39.9	46	43.5	31.5	30.5	18	66	56	3.5	50	46	46	1073	**WH25SRKDOMD**	250
	30	G 1 1/4 A	25	27.0	49.9	57	50.5	37.0	35.5	20	76	64	3.5	60	55	50	1559	**WH30SRKDOMD**	160
	38	G 1 1/2 A	32	34.0	55.9	64	57.5	41.5	40.5	22	87	72	3.5	70	60	60	2296	**WH38SRKDOMD**	160

[1]) Pressure shown = item deliverable

[3]) L = light series; [4]) S = heavy series

$\frac{\text{PN (bar)}}{10}$ = PN (MPa)

Delivery without nut and ring. Information on ordering complete fittings or alternative sealing materials see page I7.

*Please add the **suffixes** below according to the material/surface required.

Order code suffixes			
Material	Suffix surface and material	Example	Standard sealing material (no additonal. suffix needed)
Stainless Steel	71	WH16SRKDOMD71	VIT/PTFE

KOVAZ.CZ

WH-R (71) High pressure banjo elbow

EO 24° cone end / Male BSPP thread with metal sealing ring

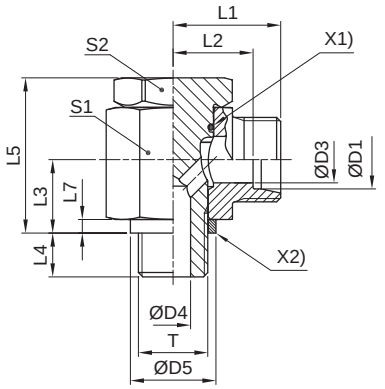

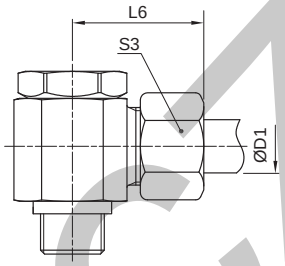

X1) O-ring OR
X2) Sealing ring DKA

Series	D1	T	D3	D4	D5	L1	L2	L3	L4	L5	L6	L7	S1	S2	S3	Weight g/1 piece	Order code*	PN (bar)[1] 71	PN (bar)[1] MS
L[3])	06	G 1/8 A	4	4.5	14	19.0	12.0	10.5	8	24	27	2.5	17	17	14	53	**WH06LROMD**	250	160
	08	G 1/4 A	6	6.0	18	21.5	14.5	14.0	12	30	29	3.0	22	19	17	101	**WH08LROMD**	250	160
	10	G 1/4 A	8	6.0	18	22.5	15.5	14.0	12	30	30	3.0	22	19	19	102	**WH10LROMD**	250	160
	12	G 3/8 A	10	7.5	22	25.0	18.0	16.5	12	36	33	3.0	27	24	22	181	**WH12LROMD**	250	160
	15	G 1/2 A	12	11.0	26	28.5	21.5	21.5	14	45	37	4.5	32	30	27	311	**WH15LROMD**	250	160
	18	G 1/2 A	15	11.0	26	28.5	21.0	21.5	14	45	37	4.5	32	30	32	319	**WH18LROMD**	250	160
	22	G 3/4 A	19	17.0	32	35.0	27.5	24.0	16	53	44	3.5	41	36	36	577	**WH22LROMD**	160	
	28	G 1 A	24	21.0	39	39.5	32.0	30.5	18	66	49	3.5	50	46	41	1034	**WH28LROMD**	160	
	35	G 1 1/4 A	30	27.0	57	46.5	36.0	35.5	20	76	58	3.5	60	55	50	1500	**WH35LROMD**	160	
	42	G 1 1/2 A	36	34.0	55	51.5	40.5	40.5	22	87	63	3.5	70	60	60	2195	**WH42LROMD**	160	
S[4])	06	G 1/4 A	4	6.0	18	23.5	16.5	14.0	12	30	31	3.0	22	19	17	107	**WH06SROMD**	315	200
	08	G 1/4 A	5	6.0	18	23.5	16.5	14.0	12	30	31	3.0	22	19	19	107	**WH08SROMD**	315	200
	10	G 3/8 A	7	7.5	22	26.0	18.5	16.5	12	36	35	3.0	27	24	22	188	**WH10SROMD**	315	200
	12	G 3/8 A	8	7.5	22	26.0	18.5	16.5	12	36	35	3.0	30	24	24	190	**WH12SROMD**	315	200
	16	G 1/2 A	12	11.0	26	30.5	22.0	21.5	14	45	40	4.5	32	30	30	317	**WH16SROMD**	315	
	20	G 3/4 A	16	17.0	32	37.0	26.5	24.0	16	53	48	3.5	41	36	36	587	**WH20SROMD**	160	
	25	G 1 A	20	21.0	39	43.5	31.5	30.5	18	66	56	3.5	50	46	46	1072	**WH25SROMD**	160	
	30	G 1 1/4 A	25	27.0	49	50.5	37.0	35.5	20	76	64	3.5	60	55	50	1560	**WH30SROMD**	160	
	38	G 1 1/2 A	32	34.0	55	57.5	41.5	40.5	22	87	72	3.5	70	60	60	2295	**WH38SROMD**	160	

[1]) Pressure shown = item deliverable

[3]) L = light series; [4]) S = heavy series

$\frac{\text{PN (bar)}}{10}$ = PN (MPa)

Delivery without nut and ring. Information on ordering complete fittings or alternative sealing materials see page I7.

*Please add the **suffixes** below according to the material/surface required

Order code suffixes			
Material	Suffix surface and material	Example	Standard sealing material (no additonal. suffix needed)
Stainless Steel	71	WH16SROMD71	VIT
Brass	MS	WH18LROMDMS	NBR

KOMAT.CZ

TH-M-KDS High pressure banjo tee

EO 24° cone end / Male metric thread with soft seal ring

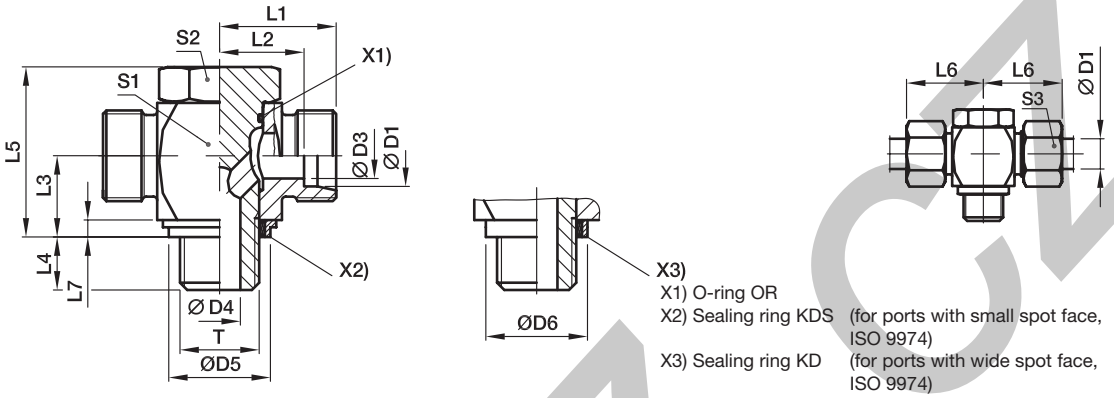

X1) O-ring OR
X2) Sealing ring KDS (for ports with small spot face, ISO 9974)
X3) Sealing ring KD (for ports with wide spot face, ISO 9974)

Series	D1	T	D3	D4	D5 KDS	D6 KD	L1	L2	L3	L4	L5	L6	L7	S1	S2	S3	Weight g/1 piece	Order code*	PN (bar)[1] Steel	71
L[3])	06	M 10×1.0	4	4.5	14.9	17.0	19.0	12.0	10.5	8	24.0	27	2.5	17	17	14	59	**TH06LMKDSOMD**	315	315
	08	M 12×1.5	6	6.0	17.0	22.0	21.5	14.5	14.0	12	30.0	29	3.0	22	19	17	104	**TH08LMKDSOMD**	315	315
	10	M 14×1.5	8	6.0	18.9	22.5	22.5	15.5	14.0	12	30.0	30	3.0	22	19	19	112	**TH10LMKDSOMD**	315	315
	12	M 16×1.5	10	7.5	21.9	27.0	25.0	18.0	16.5	12	36.0	33	3.0	27	24	22	192	**TH12LMKDSOMD**	315	315
	15	M 18×1.5	11	9.0	23.9	29.0	27.5	21.5	18.5	12	39.5	37	3.0	30	27	27	258	**TH15LMKDSOMD**	315	315
	18	M 22×1.5	15	12.0	26.9	32.0	28.5	21.0	21.5	14	45.0	37	4.5	32	30	32	337	**TH18LMKDSOMD**	315	315
	22	M 26×1.5	19	17.0	31.9	41.0	35.0	27.5	24.0	16	53.0	44	3.5	41	36	36	589	**TH22LMKDSOMD**	160	160
	28	M 33×2.0	24	21.0	39.9	46.0	39.5	32.0	30.5	18	66.0	49	3.5	50	46	41	1072	**TH28LMKDSOMD**	160	160
	35	M 42×2.0	30	27.0	49.9	57.0	46.5	36.0	35.5	20	76.0	58	3.5	60	55	50	1778	**TH35LMKDSOMD**	160	160
	42	M 48×2.0	36	34.0	55.9	64.0	51.5	40.5	40.5	22	87.0	63	3.5	70	60	60	2566	**TH42LMKDSOMD**	160	160
S[4])	06	M 12×1.5	4	6.0	17.0	22.0	23.5	16.5	14.0	12	30.0	31	3.0	22	19	17	112	**TH06SMKDSOMD**	400	400
	08	M 14×1.5	5	6.0	18.9	22.5	23.5	16.5	14.0	12	30.0	31	3.0	22	19	19	123	**TH08SMKDSOMD**	400	400
	10	M 16×1.5	7	7.5	21.9	27.0	26.0	18.5	16.5	12	36.0	35	3.0	27	24	22	200	**TH10SMKDSOMD**	400	400
	12	M 18×1.5	8	9.0	23.9	29.0	27.5	20.0	18.5	12	39.5	36	3.0	27	27	24	261	**TH12SMKDSOMD**	400	400
	16	M 22×1.5	12	12.0	26.9	32.0	30.5	22.0	21.5	14	45.0	40	4.5	32	30	30	351	**TH16SMKDSOMD**	315	315
	20	M 27×2.0	16	16.0	32.9	41.0	37.0	26.5	24.0	16	53.0	48	3.5	41	36	36	629	**TH20SMKDSOMD**	315	315
	25	M 33×2.0	20	21.0	39.9	46.0	43.5	31.5	30.5	18	66.0	56	3.5	50	46	46	1106	**TH25SMKDSOMD**	250	250
	30	M 42×2.0	25	27.0	49.9	57.0	50.5	37.0	35.5	20	76.0	64	3.5	60	55	50	1843	**TH30SMKDSOMD**	160	160
	38	M 48×2.0	32	34.0	55.9	64.0	57.5	41.5	40.5	22	87.0	72	3.5	70	60	60	2744	**TH38SMKDSOMD**	160	160

[1]) Pressure shown = item deliverable
[3]) L = light series; [4]) S = heavy series

$\frac{PN\ (bar)}{10} = PN\ (MPa)$

Delivery without nut and ring. Information on ordering complete fittings or alternative sealing materials see page I7.
***S1=SW30 in 1.4571**

*Please add the **suffixes** below according to the material/surface required.

Order code suffixes			
Material	Suffix surface and material	Example	Standard sealing material (no additonal. suffix needed)
Steel	CF	TH16SMKDSOMDCF	NBR
Stainless Steel	71	TH16SMKDOMD71	VIT/PTFE

Stainless Steel only with sealing ring KD available!
Replace KDS by KD in the order code.

TH-M High pressure banjo tee

EO 24° cone end / Male metric thread with metal sealing ring

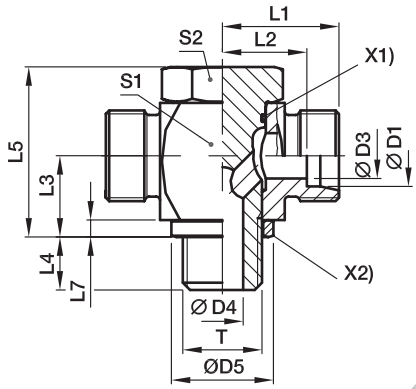

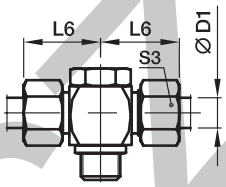

X1) O-ring OR
X2) Sealing ring DKA

Series	D1	T	D3	D4	D5	L1	L2	L3	L4	L5	L6	L7	S1	S2	S3	Weight g/1 piece	Order code*	PN (bar)[1] Steel	71
L[3]	06	M 10×1.0	4	4.5	14	19.0	12.0	10.5	8	24.0	27	2.5	17	17	14	58	**TH06LMOMD**	250	250
	08	M 12×1.5	6	6.0	17	21.5	14.5	14.0	12	30.0	29	3.0	22	19	17	104	**TH08LMOMD**	250	250
	10	M 14×1.5	8	6.0	19	22.5	15.5	14.0	12	30.0	30	3.0	22	19	19	112	**TH10LMOMD**	250	250
	12	M 16×1.5	10	7.5	21	25.0	18.0	16.5	12	36.0	33	3.0	27	24	22	191	**TH12LMOMD**	250	250
	15	M 18×1.5	11	9.0	23	27.5	21.5	18.5	12	39.5	37	3.0	30	27	27	258	**TH15LMOMD**	250	250
	18	M 22×1.5	15	12.0	27	28.5	21.0	21.5	14	45.0	37	4.5	32	30	32	337	**TH18LMOMD**	250	250
	22	M 26×1.5	19	17.0	31	35.0	27.5	24.0	16	53.0	44	3.5	41	36	36	590	**TH22LMOMD**	160	160
	28	M 33×2.0	24	21.0	39	39.5	32.0	30.5	18	66.0	49	3.5	50	46	41	1072	**TH28LMOMD**	160	160
	35	M 42×2.0	30	27.0	49	46.5	36.0	35.5	20	76.0	58	3.5	60	55	50	1778	**TH35LMOMD**	160	160
	42	M 48×2.0	36	34.0	55	51.5	40.5	40.5	22	87.0	63	3.5	70	60	60	2565	**TH42LMOMD**	160	160
S[4]	06	M 12×1.5	4	6.0	17	23.5	16.5	14.0	12	30.0	31	3.0	22	19	17	112	**TH06SMOMD**	315	315
	08	M 14×1.5	5	6.0	19	23.5	16.5	14.0	12	30.0	31	3.0	22	19	19	124	**TH08SMOMD**	315	315
	10	M 16×1.5	7	7.5	21	26.0	18.5	16.5	12	36.0	35	3.0	27	24	22	200	**TH10SMOMD**	315	315
	12	M 18×1.5	8	9.0	23	27.5	20.0	18.5	12	39.5	36	3.0	27	27	24	261	**TH12SMOMD**	315	315
	16	M 22×1.5	12	12.0	27	30.5	22.0	21.5	14	45.0	40	4.5	32	30	30	350	**TH16SMOMD**	315	315
	20	M 27×2.0	16	16.0	32	37.0	26.5	24.0	16	53.0	48	3.5	41	36	36	628	**TH20SMOMD**	160	160
	25	M 33×2.0	20	21.0	39	43.5	31.5	30.5	18	66.0	56	3.5	50	46	46	1106	**TH25SMOMD**	160	
	30	M 42×2.0	25	27.0	49	50.5	37.0	35.5	20	76.0	64	3.5	60	55	50	1843	**TH30SMOMD**	160	160
	38	M 48×2.0	32	34.0	55	57.5	41.5	40.5	22	87.0	72	3.5	70	60	60	2741	**TH38SMOMD**	160	160

[1]) Pressure shown = item deliverable

[3]) L = light series; [4]) S = heavy series

$\frac{\text{PN (bar)}}{10}$ = PN (MPa)

Delivery without nut and ring. Information on ordering complete fittings or alternative sealing materials see page I7.

***S1=SW30 in 1.4571**

*Please add the **suffixes** below according to the material/surface required.

Order code suffixes			
Material	Suffix surface and material	Example	Standard sealing material (no additonal. suffix needed)
Steel	CF	TH16SMOMDCF	NBR
Stainless Steel	71	TH16SMOMD71	VIT

KOVAL.CZ

TH-R-KDS High pressure banjo tee

EO 24° cone end / Male BSPP thread with soft seal ring

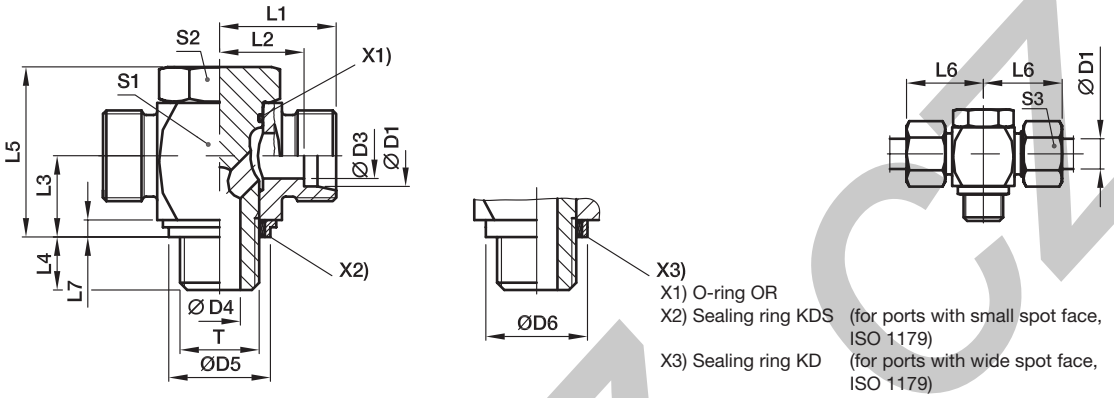

X1) O-ring OR
X2) Sealing ring KDS (for ports with small spot face, ISO 1179)
X3) Sealing ring KD (for ports with wide spot face, ISO 1179)

Series	D1	T	D3	D4	D5 KDS	D6 KD	L1	L2	L3	L4	L5	L6	L7	S1	S2	S3	Weight g/1 piece	Order code*	PN (bar)[1] Steel	71
L[3])	06	G 1/8 A	4	4.5	14.9	17	19.0	12.0	10.5	8	24	27	2.5	17	17	14	58	**TH06LRKDSOMD**	315	315
	08	G 1/4 A	6	6.0	18.9	22	21.5	14.5	14.0	12	30	29	3.0	22	19	17	108	**TH08LRKDSOMD**	315	315
	10	G 1/4 A	8	6.0	18.9	22	22.5	15.5	14.0	12	30	30	3.0	22	19	19	110	**TH10LRKDSOMD**	315	315
	12	G 3/8 A	10	7.5	21.9	27	25.0	18.0	16.5	12	36	33	3.0	27	24	22	193	**TH12LRKDSOMD**	315	315
	15	G 1/2 A	12	11.0	26.9	32	28.5	21.5	21.5	14	45	37	4.5	32	30	27	321	**TH15LRKDSOMD**	315	315
	18	G 1/2 A	15	11.0	26.9	32	28.5	21.0	21.5	14	45	37	4.5	32	30	32	329	**TH18LRKDSOMD**	315	315
	22	G 3/4 A	19	17.0	32.9	41	35.0	27.5	24.0	16	53	44	3.5	41	36	36	585	**TH22LRKDSOMD**	160	160
	28	G 1 A	24	21.0	39.9	46	39.5	32.0	30.5	18	66	49	3.5	50	46	41	1090	**TH28LRKDSOMD**	160	160
	35	G 1 1/4 A	30	27.0	49.9	57	46.5	36.0	35.5	20	76	58	3.5	60	55	50	1765	**TH35LRKDSOMD**	160	160
	42	G 1 1/2 A	36	34.0	55.9	64	51.5	40.5	40.5	22	87	63	3.5	70	60	60	2545	**TH42LRKDSOMD**	160	160
S[4])	06	G 1/4 A	4	6.0	18.9	22	23.5	16.5	14.0	12	30	31	3.0	22	19	17	116	**TH06SRKDSOMD**	400	400
	08	G 1/4 A	5	6.0	18.9	22	23.5	16.5	14.0	12	30	31	3.0	22	19	19	121	**TH08SRKDSOMD**	400	400
	10	G 3/8 A	7	7.5	21.9	27	26.0	18.5	16.5	12	36	35	3.0	27	24	22	201	**TH10SRKDSOMD**	400	400
	12	G 3/8 A	8	7.5	21.9	27	26.0	18.5	16.5	12	36	35	3.0	27	24	24	207	**TH12SRKDSOMD**	400	400
	16	G 1/2 A	12	11.0	26.9	32	30.5	22.0	21.5	14	45	40	4.5	32	30	30	350	**TH16SRKDSOMD**	315	315
	20	G 3/4 A	16	17.0	32.9	41	37.0	26.5	24.0	16	53	48	3.5	41	36	36	620	**TH20SRKDSOMD**	315	315
	25	G 1 A	20	21.0	39.9	46	43.5	31.5	30.5	18	66	56	3.5	50	46	46	1124	**TH25SRKDSOMD**	250	250
	30	G 1 1/4 A	25	27.0	49.9	57	50.5	37.0	35.5	20	76	64	3.5	60	55	50	1830	**TH30SRKDSOMD**	160	160
	38	G 1 1/2 A	32	34.0	55.9	64	57.5	41.5	40.5	22	87	72	3.5	70	60	60	2721	**TH38SRKDSOMD**	160	160

[1]) Pressure shown = item deliverable
[3]) L = light series; [4]) S = heavy series

$\frac{PN\ (bar)}{10} = PN\ (MPa)$

Delivery without nut and ring. Information on ordering complete fittings or alternative sealing materials see page I7.

*Please add the **suffixes** below according to the material/surface required.

Order code suffixes			
Material	Suffix surface and material	Example	Standard sealing material (no additonal. suffix needed)
Steel	CF	TH16SRKDSOMDCF	NBR
Stainless Steel	71	TH16SRKDOMD71	VIT/PTFE

Stainless Steel only with sealing ring KD available!
Replace KDS by KD in the order code.

KOVAX.cz

TH-R High pressure banjo tee

EO 24° cone end / Male BSPP thread with metal sealing ring

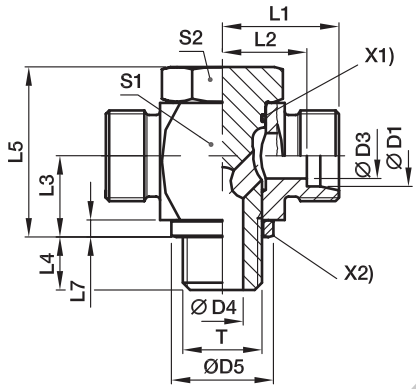

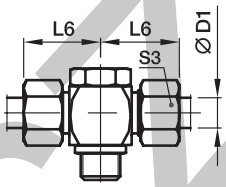

X1) O-ring OR
X2) Sealing ring DKA

Series	D1	T	D3	D4	D5	L1	L2	L3	L4	L5	L6	L7	S1	S2	S3	Weight g/1 piece	Order code*	PN (bar)[1] Steel	71
L[3]	06	G 1/8 A	4	4.5	14	19.0	12.0	10.5	8	24	27	2.5	17	17	14	58	**TH06LROMD**	250	250
	08	G 1/4 A	6	6.0	18	21.5	14.5	14.0	12	30	29	3.0	22	19	17	108	**TH08LROMD**	250	250
	10	G 1/4 A	8	6.0	18	22.5	15.5	14.0	12	30	30	3.0	22	19	19	110	**TH10LROMD**	250	250
	12	G 3/8 A	10	7.5	22	25.0	18.0	16.5	12	36	33	3.0	27	24	22	193	**TH12LROMD**	250	250
	15	G 1/2 A	12	11.0	26	28.5	21.5	21.5	14	45	37	4.5	32	30	27	321	**TH15LROMD**	250	250
	18	G 1/2 A	15	11.0	26	28.5	21.0	21.5	14	45	37	4.5	32	30	32	329	**TH18LROMD**	250	250
	22	G 3/4 A	19	17.0	32	35.0	27.5	24.0	16	53	44	3.5	41	36	36	584	**TH22LROMD**	160	160
	28	G 1 A	24	21.0	39	39.5	32.0	30.5	18	66	49	3.5	50	46	41	1090	**TH28LROMD**	160	160
	35	G 1 1/4 A	30	27.0	57	46.5	36.0	35.5	20	76	58	3.5	60	55	50	1766	**TH35LROMD**	160	160
	42	G 1 1/2 A	36	34.0	55	51.5	40.5	40.5	22	87	63	3.5	70	60	60	2544	**TH42LROMD**	160	160
S[4]	06	G 1/4 A	4	6.0	18	23.5	16.5	14.0	12	30	31	3.0	22	19	17	116	**TH06SROMD**	315	315
	08	G 1/4 A	5	6.0	18	23.5	16.5	14.0	12	30	31	3.0	22	19	19	121	**TH08SROMD**	315	315
	10	G 3/8 A	7	7.5	22	26.0	18.5	16.5	12	36	35	3.0	27	24	22	201	**TH10SROMD**	315	315
	12	G 3/8 A	8	7.5	22	26.0	18.5	16.5	12	36	35	3.0	27	24	24	207	**TH12SROMD**	315	315
	16	G 1/2 A	12	11.0	26	30.5	22.0	21.5	14	45	40	4.5	32	30	30	350	**TH16SROMD**	315	315
	20	G 3/4 A	16	17.0	32	37.0	26.5	24.0	16	53	48	3.5	41	36	36	618	**TH20SROMD**	160	160
	25	G 1 A	20	21.0	39	43.5	31.5	30.5	18	66	56	3.5	50	46	46	1124	**TH25SROMD**	160	160
	30	G 1 1/4 A	25	27.0	49	50.5	37.0	35.5	20	76	64	3.5	60	55	50	1831	**TH30SROMD**	160	160
	38	G 1 1/2 A	32	34.0	55	57.5	41.5	40.5	22	87	72	3.5	70	60	60	2720	**TH38SROMD**	160	160

[1]) Pressure shown = item deliverable

[3]) L = light series; [4]) S = heavy series

$\frac{\text{PN (bar)}}{10}$ = PN (MPa)

Delivery without nut and ring. Information on ordering complete fittings or alternative sealing materials see page I7.

*Please add the **suffixes** below according to the material/surface required.

Order code suffixes			
Material	Suffix surface and material	Example	Standard sealing material (no additonal. suffix needed)
Steel	CF	TH16SROMDCF	NBR
Stainless Steel	71	TH16SROMD71	VIT

KOVAK.cz

WE-NPT Male stud elbow

EO 24° cone end / Male NPT thread (SAE J476)

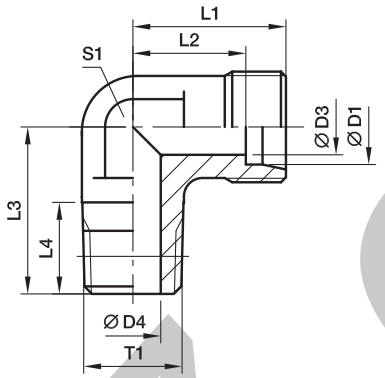

Series	D1	T1	D3	D4	L1	L2	L3	L4	L5	S1	S2	Weight g/1 piece	Order code*	PN (bar)[1] Steel	71	MS
LL[2])	04	1/8-27 NPT	3.0	4.0	15	11.0	17	10.0	21	9	10	18	**WE04LL1/8NPT**	100		
	06	1/8-27 NPT	4.5	4.5	15	9.5	17	10.0	21	9	12	17	**WE06LL1/8NPT**	100		
	08	1/8-27 NPT	6.0	5.0	17	11.5	20	10.0	23	12	14	25	**WE08LL1/8NPT**	100		
L[3])	06	1/8-27 NPT	4.0	4.0	19	12.0	20	10.0	27	12	14	29	**WE06L1/8NPT**	315	315	200
	06	1/4-18 NPT	4.0	7.0	21	14.0	26	14.5	29	12	14	44	**WE06L1/4NPT**	315	315	200
	06	3/8-18 NPT	4.0	8.0	25	18.0	28	14.5	33	17	14	55	**WE06L3/8NPT**	315	315	200
	08	1/8-27 NPT	6.0	4.0	21	14.0	26	10.0	29	12	17	48	**WE08L1/8NPT**	315	315	200
	08	1/4-18 NPT	6.0	6.0	21	14.0	26	14.5	29	12	17	47	**WE08L1/4NPT**	315	315	200
	10	1/4-18 NPT	8.0	7.0	22	15.0	27	14.5	30	14	19	61	**WE10L1/4NPT**	315	315	200
	10	3/8-18 NPT	8.0	8.0	24	17.0	28	14.5	32	17	19	92	**WE10L3/8NPT**	315	315	200
	12	1/4-18 NPT	10.0	7.0	24	17.0	28	14.5	32	17	22	82	**WE12L1/4NPT**	315	315	200
	12	3/8-18 NPT	10.0	8.0	24	17.0	28	14.5	32	17	22	92	**WE12L3/8NPT**	315	315	200
	12	1/2-14 NPT	10.0	11.0	28	21.0	34	19.5	36	19	22	90	**WE12L1/2NPT**	315	315	200
	15	1/2-14 NPT	12.0	11.0	28	21.0	34	19.5	36	19	27	89	**WE15L1/2NPT**	315	315	200
	18	1/2-14 NPT	15.0	12.0	31	23.5	36	19.5	40	24	32	150	**WE18L1/2NPT**	315	315	200
	22	3/4-14 NPT	19.0	16.0	35	27.5	42	19.5	44	27	36	176	**WE22L3/4NPT**	160	160	100
	28	1-11.5 NPT	24.0	21.0	38	30.5	48	24.5	47	36	41	314	**WE28L1NPT**	160	160	100
	35	1 1/4-11.5 NPT	30.0	28.0	45	34.5	54	25.0	56	41	50	465	**WE35L11/4NPT**	160	160	100
	42	1 1/2-11.5 NPT	36.0	34.0	51	40.0	61	26.0	63	50	60	849	**WE42L11/2NPT**	160	160	100
S[4])	06	1/4-18 NPT	4.0	4.0	23	16.0	26	14.5	31	12	17	56	**WE06S1/4NPT**	630	630	400
	08	1/4-18 NPT	5.0	5.0	24	17.0	27	14.5	32	14	19	73	**WE08S1/4NPT**	630	630	400
	08	3/8-18 NPT	5.0	8.0	25	18.0	28	14.5	33	17	19	77	**WE08S3/8NPT**	630	630	400
	08	1/2-14 NPT	5.0	10.0	30	23.0	34	19.5	38	19	19	75	**WE08S1/2NPT**	630	630	400
	10	1/4-18 NPT	7.0	5.0	25	17.5	28	14.5	34	17	22	96	**WE10S1/4NPT**	630	630	400
	10	3/8-18 NPT	7.0	7.0	25	17.5	28	14.5	34	17	22	98	**WE10S3/8NPT**	630	630	400
	12	1/4-18 NPT	8.0	5.0	29	21.5	29	14.5	38	17	24	73	**WE12S1/4NPT**	630	630	400
	12	3/8-18 NPT	8.0	8.0	29	22.5	28	14.5	38	17	24	123	**WE12S3/8NPT**	630	630	400
	12	1/2-14 NPT	8.0	10.0	30	22.5	34	19.5	39	19	24	107	**WE12S1/2NPT**	630	630	400
	16	1/2-14 NPT	12.0	12.0	33	24.5	36	19.5	43	24	30	157	**WE16S1/2NPT**	400	400	250
	20	3/4-14 NPT	16.0	16.0	37	26.5	42	19.5	48	27	36	205	**WE20S3/4NPT**	400	400	250
	25	1-11.5 NPT	20.0	20.0	42	30.0	48	24.5	54	36	46	381	**WE25S1NPT**	400	400	250
	30	1 1/4-11.5 NPT	25.0	25.0	49	35.5	54	25.0	62	41	50	598	**WE30S11/4NPT**	400	400	250
	38	1 1/2-11.5 NPT	32.0	32.0	57	41.0	61	26.0	72	50	60	1029	**WE38S11/2NPT**	315	315	200

[1]) Pressure shown = item deliverable

[2]) LL = very light series; [3]) L = light series; [4]) S = heavy series

$\frac{\text{PN (bar)}}{10}$ = PN (MPa)

Delivery without nut and ring. Information on ordering complete fittings see page I7.

*Please add the **suffixes** below according to the material/surface required.

Order code suffixes		
Material	Suffix surface and material	Example
Steel	CFX	WE16S1/2NPTCFX
Stainless Steel	71X	WE16S1/2NPT71X
Brass	MSX	WE16S1/2NPTMSX

WE-M(KEG) Male stud elbow

EO 24° cone end / Male metric taper thread (DIN 3852-1, type C)

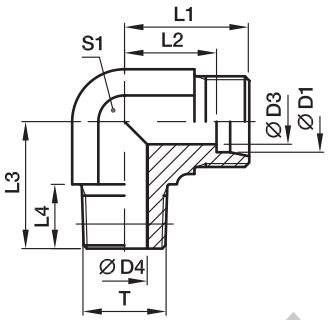

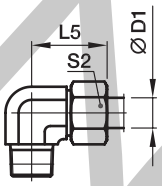

Series	D1	T	D3	D4	L1	L2	L3	L4	L5	S1	S2	Weight g/1 piece	Order code*	PN (bar)[1] Steel	71	MS
LL[2])	04	M 08×1.0 tap.	3.0	3.5	15	11.0	17	8	21	9	10	14	**WE04LLM**	100	100	63
	06	M 10×1.0 tap.	4.5	4.5	15	9.5	17	8	21	9	12	17	**WE06LLM**	100	100	63
	08	M 10×1.0 tap.	6.0	6.0	17	11.5	20	8	23	12	14	25	**WE08LLM**	100	100	63
L[3])	06	M 10×1.0 tap.	4.0	4.0	19	12.0	20	8	27	12	14	29	**WE06LM**	315	315	200
	08	M 12×1.5 tap.	6.0	6.0	21	14.0	26	12	29	12	17	46	**WE08LM**	315	315	200
	10	M 14×1.5 tap.	8.0	7.0	22	15.0	27	12	30	14	19	62	**WE10LM**	315	315	200
	12	M 16×1.5 tap.	10.0	9.0	24	17.0	28	12	32	17	22	89	**WE12LM**	315	315	200
	15	M 18×1.5 tap.	12.0	11.0	28	21.0	32	12	36	19	27	78	**WE15LM**	315	315	200
	18	M 22×1.5 tap.	15.0	14.0	31	23.0	36	14	40	24	32	148	**WE18LM**	315	315	200
S[4])	06	M 12×1.5 tap.	4.0	4.0	23	16.0	26	12	31	12	17	53	**WE06SM**	400	400	250
	08	M 14×1.5 tap.	5.0	5.0	24	17.0	27	12	32	14	19	78	**WE08SM**	400	400	250
	10	M 16×1.5 tap.	7.0	7.0	25	17.5	28	12	34	17	22	102	**WE10SM**	400	400	250
	12	M 18×1.5 tap.	8.0	8.0	29	21.5	28	12	38	17	24	134	**WE12SM**	400	400	250
	16	M 22×1.5 tap.	12.0	12.0	33	24.5	32	14	43	24	30	161	**WE16SM**	400	400	250

[1]) Pressure shown = item deliverable

[2]) LL = very light series; [3]) L = light series; [4]) S = heavy series

$\frac{\text{PN (bar)}}{10}$ = PN (MPa)

Delivery without nut and ring. Information on ordering complete fittings see page I7.

Order code suffixes		
Material	Suffix surface and material	Example
Steel	CFX	WE16SMCFX
Stainless Steel	71X	WE16SM71X
Brass	MSX	WE16SMMSX

*Please add the **suffixes** below according to the material/surface required.

KOVAZ.cz

WE-M Male stud elbow

EO 24° cone end / Male metric thread – metal sealing edge (ISO 9974)

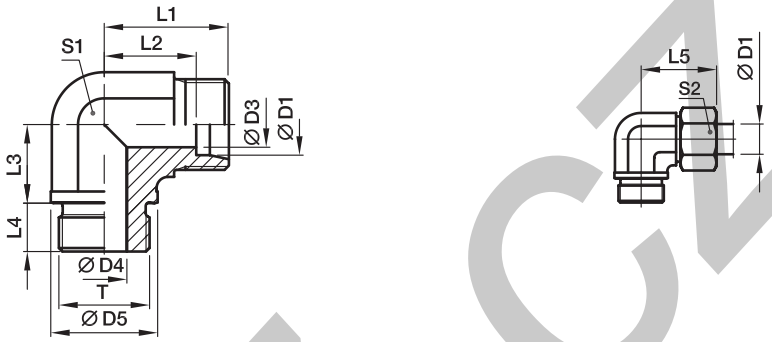

Series	D1	T	D3	D4	D5	L1	L2	L3	L4	L5	S1	S2	Weight g/1 piece	Order code*	PN (bar)[1] Steel	71
L[3])	22	M 26×1.5	19	18	31	35	27.5	26	16	44	27	36	173	**WE22LM**	160	160
	28	M 33×2.0	24	23	39	38	30.5	30	18	47	36	41	303	**WE28LM**	160	160
	35	M 42×2.0	30	30	49	45	34.5	34	20	56	41	50	469	**WE35LM**	160	160
	42	M 48×2.0	36	36	55	51	40.0	39	22	63	50	60	661	**WE42LM**	160	160
S[4])	20	M 27×2.0	16	16	32	37	26.5	26	16	48	27	36	208	**WE20SM**	400	400
	25	M 33×2.0	20	20	39	42	30.0	30	18	54	36	46	396	**WE25SM**	250	250
	30	M 42×2.0	25	25	49	49	35.5	34	20	62	41	50	632	**WE30SM**	160	160
	38	M 48×2.0	32	32	55	57	41.0	39	22	72	50	60	907	**WE38SM**	160	160

[1]) Pressure shown = item deliverable

[3]) L = light series; [4]) S = heavy series

$\frac{\text{PN (bar)}}{10}$ = PN (MPa)

Delivery without nut and ring. Information on ordering complete fittings see page I7.

*Please add the **suffixes** below according to the material/surface required.

Order code suffixes		
Material	Suffix surface and material	Example
Steel	CFX	WE20SMCFX
Stainless Steel	71X	WE20SM71X

KOVIZ.cz

WE-R Male stud elbow

EO 24° cone end / Male BSPP thread – metal sealing edge (ISO 1179)

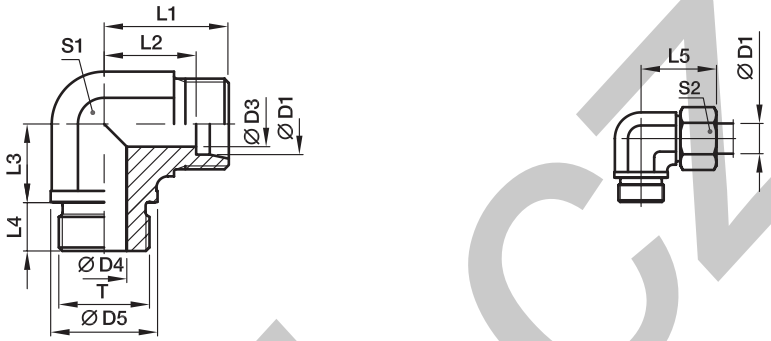

Series	D1	T	D3	D4	D5	L1	L2	L3	L4	L5	S1	S2	Weight g/1 piece	Order code*	PN (bar)[1] Steel	71	MS
L[3]	22	G 3/4 A	19	18	32	35	27.5	26	16	44	27	36	168	**WE22LR**	160	160	100
	28	G 1 A	24	23	39	38	30.5	30	18	47	36	41	305	**WE28LR**	160	160	100
	35	G 1 1/4 A	30	30	49	45	34.5	34	20	56	41	50	465	**WE35LR**	160	160	100
	42	G 1 1/2 A	36	36	55	51	40.0	39	22	63	50	60	706	**WE42LR**	160	160	100
S[4]	20	G 3/4 A	16	16	32	37	26.5	26	16	48	27	36	210	**WE20SR**	400	400	250
	25	G 1 A	20	20	39	42	30.0	30	18	54	36	46	388	**WE25SR**	250	250	160
	30	G 1 1/4 A	25	25	49	49	35.5	34	20	62	41	50	630	**WE30SR**	160	160	100
	38	G 1 1/2 A	32	32	55	57	41.0	39	22	72	50	60	888	**WE38SR**	160	160	100

[1]) Pressure shown = item deliverable

[3]) L = light series; [4]) S = heavy series

$\frac{\text{PN (bar)}}{10}$ = PN (MPa)

Delivery without nut and ring. Information on ordering complete fittings see page I7.

Order code suffixes		
Material	Suffix surface and material	Example
Steel	CFX	WE20SRCFX
Stainless Steel	71X	WE20SR71X
Brass	MSX	WE20SRMSX

*Please add the **suffixes** below according to the material/surface required.

KOVAL.cz

WE-R (KEG) Male stud elbow

EO 24° cone end / Male short BSP taper thread (DIN 3852-2, type C)

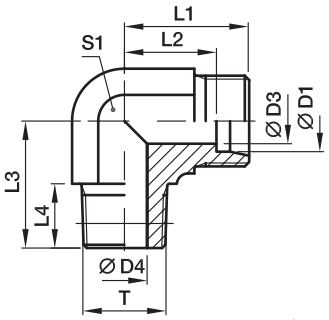

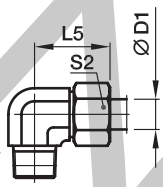

Series	D1	T	D3	D4	L1	L2	L3	L4	L5	S1	S2	Weight g/1 piece	Order code*	PN (bar)[1] Steel	71	MS
LL[2])	04	R 1/8 tap.	3.0	4.0	15	11.0	17	8	21	9	10	17	**WE04LLR**	100	100	63
	06	R 1/8 tap.	4.5	4.5	15	9.5	17	8	21	9	12	17	**WE06LLR**	100	100	63
	08	R 1/8 tap.	6.0	6.0	17	11.5	20	8	23	12	14	24	**WE08LLR**	100	100	63
	10	R 1/4 tap.	8.0	7.0	18	12.5	23	12	24	12	17	36	**WE10LLR**	100		
	12	R 1/4 tap.	10.0	7.0	19	13.0	23	12	25	14	19	46	**WE12LLR**	100		
L[3])	06	R 1/8 tap.	4.0	4.0	19	12.0	20	8	27	12	14	30	**WE06LR**	315	315	200
	06	R 1/4 tap.	4.0	6.0	21	14.0	26	12	29	12	14	47	**WE06LR1/4**	315	315	
	08	R 1/4 tap.	6.0	6.0	21	14.0	26	12	29	12	17	46	**WE08LR**	315	315	200
	08	R 1/8 tap.	6.0	4.0	21	14.0	26	8	29	12	17	49	**WE08LR1/8**	315	315	
	08	R 3/8 tap.	6.0	9.0	24	17.0	28	12	32	17	17	94	**WE08LR3/8**	315	315	
	10	R 1/4 tap.	8.0	7.0	22	15.0	27	12	30	14	19	61	**WE10LR**	315	315	200
	10	R 3/8 tap.	8.0	9.0	24	17.0	28	12	32	17	19	87	**WE10LR3/8**	315	315	
	12	R 3/8 tap.	10.0	9.0	24	17.0	28	12	32	17	22	88	**WE12LR**	315	315	200
	12	R 1/4 tap.	10.0	7.0	24	17.0	27	12	32	17	22	80	**WE12LR1/4**	315	315	
	12	R 1/2 tap.	10.0	11.0	28	21.0	34	14	36	19	22	89	**WE12LR1/2**	315	315	
	15	R 1/2 tap.	12.0	11.0	28	21.0	34	14	36	19	27	94	**WE15LR**	315	315	200
	18	R 1/2 tap.	15.0	14.0	31	23.5	36	14	40	24	32	141	**WE18LR**	315	315	200
S[4])	06	R 1/4 tap.	4.0	4.0	23	16.0	26	12	31	12	17	56	**WE06SR**	400	400	250
	06	R 3/8 tap.	4.0	7.0	25	18.0	28	12	33	17	17	61	**WE06SR3/8**	400	400	
	08	R 1/4 tap.	5.0	5.0	24	17.0	27	12	32	14	19	73	**WE08SR**	400	400	250
	08	R 3/8 tap.	5.0	7.0	25	18.0	28	12	33	17	19	63	**WE08SR3/8**	400	400	
	10	R 3/8 tap.	7.0	7.0	25	17.5	28	12	34	17	22	104	**WE10SR**	400	400	250
	10	R 1/4 tap.	7.0	5.0	25	17.5	28	12	34	17	22	59	**WE10SR1/4**	400	400	
	10	R 1/2 tap.	7.0	10.0	30	22.5	32	14	39	19	22	98	**WE10SR1/2**	400	400	
	12	R 3/8 tap.	8.0	8.0	29	21.5	28	12	38	17	24	126	**WE12SR**	400	400	250
	12	R 1/2 tap.	8.0	11.0	30	22.5	32	14	39	19	24	97	**WE12SR1/2**	400	400	
	16	R 1/2 tap.	12.0	12.0	33	24.5	32	14	43	24	30	150	**WE16SR**	400	400	250

[1]) Pressure shown = item deliverable

[2]) LL = very light series; [3]) L = light series; [4]) S = heavy series

$\frac{\text{PN (bar)}}{10}$ = PN (MPa)

Delivery without nut and ring. Information on ordering complete fittings see page I7.

*Please add the **suffixes** below according to the material/surface required.

Order code suffixes		
Material	Suffix surface and material	Example
Steel	CFX	WE16SRCFX
Stainless Steel	71X	WE16SR71X
Brass	MSX	WE16SRMSX

KOMZ.cz

TE-M Male stud branch tee

EO 24° cone end / Male metric thread – metal sealing edge (ISO 9974)

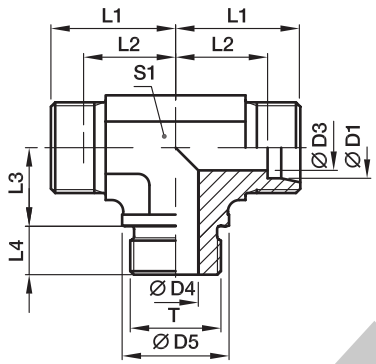

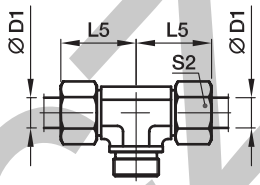

Series	D1	T	D3	D4	D5	L1	L2	L3	L4	L5	S1	S2	Weight g/1 piece	Order code*	PN (bar)[1] Steel	71
L[3])	22	M 26×1.5	19	18	31	35	27.5	26	16	44	27	36	208	**TE22LM**	160	160
	28	M 33×2.0	24	23	39	38	30.5	30	18	47	36	41	352	**TE28LM**	160	160
	35	M 42×2.0	30	30	49	45	34.5	34	20	56	41	50	554	**TE35LM**	160	160
	42	M 48×2.0	36	36	55	51	40.0	39	22	63	50	60	847	**TE42LM**	160	160
S[4])	20	M 27×2.0	16	16	32	37	26.5	26	16	48	27	36	265	**TE20SM**	400	400
	25	M 33×2.0	20	20	39	42	30.0	30	18	54	36	46	482	**TE25SM**	250	250
	30	M 42×2.0	25	25	49	49	35.5	34	20	62	41	50	772	**TE30SM**	160	160
	38	M 48×2.0	32	32	55	57	41.0	39	22	72	50	60	1121	**TE38SM**	160	160

[1]) Pressure shown = item deliverable

[3]) L = light series; [4]) S = heavy series

$\frac{\text{PN (bar)}}{10}$ = PN (MPa)

Delivery without nut and ring. Information on ordering complete fittings see page I7.

*Please add the **suffixes** below according to the material/surface required.

Order code suffixes		
Material	Suffix surface and material	Example
Steel	CFX	TE20SMCFX
Stainless Steel	71X	TE20SM71X

KOVAL.cz

TE-R Male stud branch tee

EO 24° cone end / Male BSPP thread – metal sealing edge (ISO 1179)

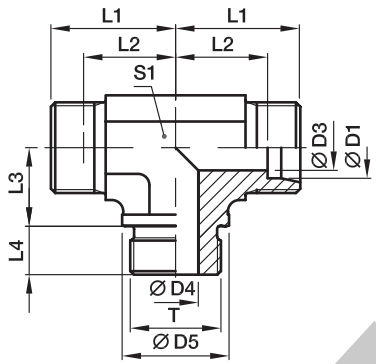

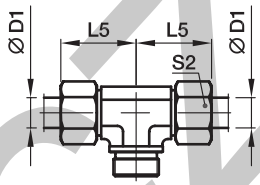

Series	D1	T	D3	D4	D5	L1	L2	L3	L4	L5	S1	S2	Weight g/1 piece	Order code*	PN (bar)[1] Steel	71	MS
L[3]	22	G 3/4 A	19	18	32	35	27.5	26	16	44	27	36	208	**TE22LR**	160	160	100
	28	G 1 A	24	23	39	38	30.5	30	18	47	36	41	378	**TE28LR**	160	160	100
	35	G 1 1/4 A	30	30	49	45	34.5	34	20	56	41	50	554	**TE35LR**	160	160	100
	42	G 1 1/2 A	36	36	55	51	40.0	39	22	63	50	60	847	**TE42LR**	160	160	100
S[4]	20	G 3/4 A	16	16	32	37	26.5	26	16	48	27	36	267	**TE20SR**	400	400	250
	25	G 1 A	20	20	39	42	30.0	30	18	54	36	46	485	**TE25SR**	250	250	
	30	G 1 1/4 A	25	25	49	49	35.5	34	20	62	41	50	762	**TE30SR**	160	160	
	38	G 1 1/2 A	32	32	55	57	41.0	39	22	72	50	60	1121	**TE38SR**	160	160	

[1]) Pressure shown = item deliverable

[3]) L = light series; [4]) S = heavy series

$\frac{\text{PN (bar)}}{10}$ = PN (MPa)

Delivery without nut and ring. Information on ordering complete fittings see page I7.

Order code suffixes		
Material	Suffix surface and material	Example
Steel	CFX	TE20SRCFX
Stainless Steel	71X	TE20SR71X
Brass	MSX	TE20SRMSX

*Please add the **suffixes** below according to the material/surface required.

KOVAL.cz

TE-R (KEG) Male stud branch tee

EO 24° cone end / Male short BSP taper thread (DIN 3852-2, type C)

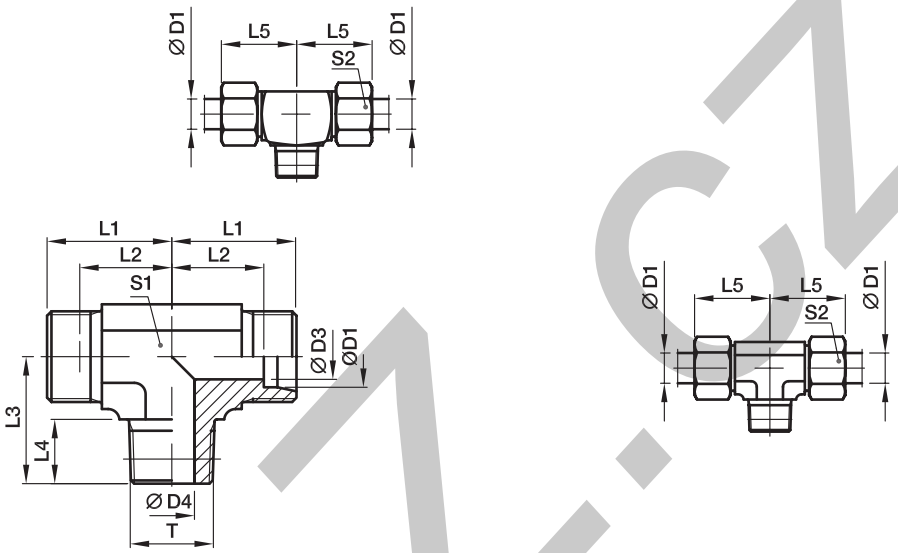

Series	D1	T	D3	D4	L1	L2	L3	L4	L5	S1	S2	Weight g/1 piece	Order code*	PN (bar)[1] Steel	71	MS
LL[2])	04	R 1/8 tap.	3.0	4.0	15	11.0	17	8	21	9	10	21	**TE04LLR**	100	100	63
	06	R 1/8 tap.	4.5	4.5	15	9.5	17	8	21	9	12	21	**TE06LLR**	100	100	63
	08	R 1/8 tap.	6.0	6.0	17	11.5	20	8	23	12	14	29	**TE08LLR**	100	100	63
L[3])	06	R 1/8 tap.	4.0	4.0	19	12.0	20	8	27	14	14	38	**TE06LR**	315	315	200
	08	R 1/4 tap.	6.0	6.0	21	14.0	26	12	29	12	17	58	**TE08LR**	315	315	200
	10	R 1/4 tap.	8.0	7.0	22	15.0	27	12	30	14	19	43	**TE10LR**	315	315	200
	12	R 3/8 tap.	10.0	9.0	24	17.0	28	12	32	17	22	61	**TE12LR**	315	315	200
	15	R 1/2 tap.	12.0	11.0	28	21.0	34	14	36	19	27	113	**TE15LR**	315	315	200
	18	R 1/2 tap.	15.0	14.0	31	23.5	36	14	40	24	32	149	**TE18LR**	315	315	200
S[4])	06	R 1/4 tap.	4.0	4.0	23	16.0	26	12	31	12	17	73	**TE06SR**	400	400	250
	08	R 1/4 tap.	5.0	5.0	24	17.0	27	12	32	14	19	61	**TE08SR**	400	400	250
	10	R 3/8 tap.	7.0	7.0	25	17.5	28	12	34	17	22	82	**TE10SR**	400	400	250
	12	R 3/8 tap.	8.0	8.0	29	21.5	28	12	38	19*	24	105	**TE12SR**	400	400	250
	16	R 1/2 tap.	12.0	12.0	33	24.5	32	14	43	24	30	175	**TE16SR**	400	400	250

[1]) Pressure shown = item deliverable

[2]) LL = very light series; [3]) L = light series; [4]) S = heavy series

*S1 = 17 in 1.4571

$\frac{\text{PN (bar)}}{10}$ = PN (MPa)

Delivery without nut and ring. Information on ordering complete fittings see page I7.

Order code suffixes		
Material	Suffix surface and material	Example
Steel	CFX	TE16SRCFX
Stainless Steel	71X	TE16SR71X
Brass	MSX	TE16SRMSX

*Please add the **suffixes** below according to the material/surface required.

KOMAZ.CZ

TE-M(KEG) Male stud branch tee

EO 24° cone end / Male short metric taper thread (DIN 3852-1, type C)

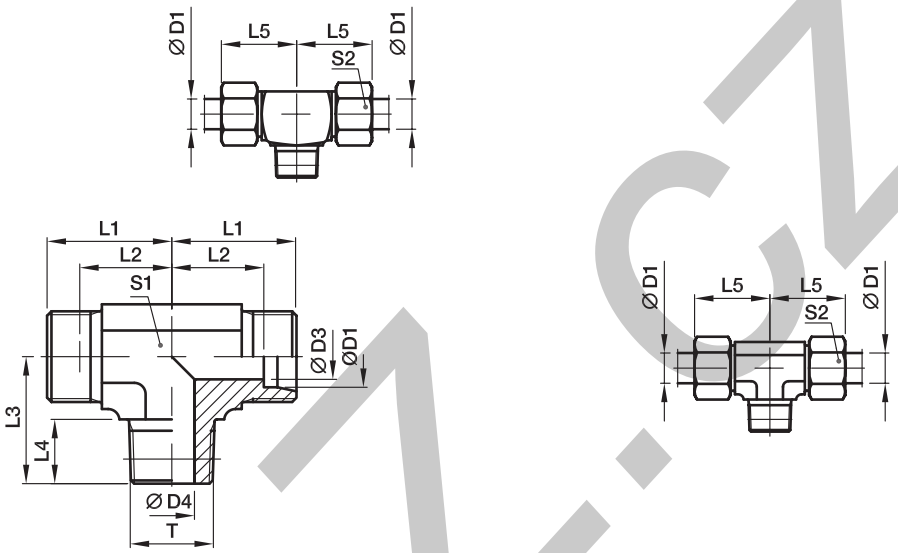

Series	D1	T	D3	D4	L1	L2	L3	L4	L5	S1	S2	Weight g/1 piece	Order code*	PN (bar)[1] Steel	PN (bar)[1] 71
LL[2])	04	M 08×1.0 tap.	3.0	3.5	15	11.0	17	8	21	9	10	17	**TE04LLM**	100	100
	06	M 10×1.0 tap.	4.5	4.5	15	9.5	17	8	21	9	12	20	**TE06LLM**	100	100
	08	M 10×1.0 tap.	6.0	6.0	17	11.5	20	8	23	12	14	29	**TE08LLM**	100	100
L[3])	06	M 10×1.0 tap.	4.0	4.0	19	12.0	20	8	27	12	14	38	**TE06LM**	315	315
	08	M 12×1.5 tap.	6.0	6.0	21	14.0	26	12	29	12	17	54	**TE08LM**	315	315
	10	M 14×1.5 tap.	8.0	7.0	22	15.0	27	12	30	14	19	45	**TE10LM**	315	315
	12	M 16×1.5 tap.	10.0	9.0	24	17.0	28	12	32	17	22	60	**TE12LM**	315	315
	15	M 18×1.5 tap.	12.0	11.0	28	21.0	32	12	36	19	27	100	**TE15LM**	315	315
	18	M 22×1.5 tap.	15.0	14.0	31	23.5	36	14	40	24	32	149	**TE18LM**	315	315
S[4])	06	M 12×1.5 tap.	4.0	4.0	23	16.0	26	12	31	12	17	69	**TE06SM**	400	400
	08	M 14×1.5 tap.	5.0	5.0	24	17.0	27	12	32	14	19	98	**TE08SM**	400	400
	10	M 16×1.5 tap.	7.0	7.0	25	17.5	28	12	34	17	22	82	**TE10SM**	400	400
	12	M 18×1.5 tap.	8.0	8.0	29	21.5	28	12	38	19*	24	106	**TE12SM**	400	400
	16	M 22×1.5 tap.	12.0	12.0	33	24.5	32	14	43	24	30	177	**TE16SM**	400	400

[1]) Pressure shown = item deliverable

[2]) LL = very light series; [3]) L = light series; [4]) S = heavy series

*S1 = 17 in 1.4571

$\frac{\text{PN (bar)}}{10}$ = PN (MPa)

Delivery without nut and ring. Information on ordering complete fittings see page I7.

*Please add the **suffixes** below according to the material/surface required.

Order code suffixes		
Material	Suffix surface and material	Example
Steel	CFX	TE16SMCFX
Stainless Steel	71X	TE16SM71X

KOMZ.CZ

LE-M Male stud run tee

EO 24° cone end / Male metric thread – metal sealing edge (ISO 9974)

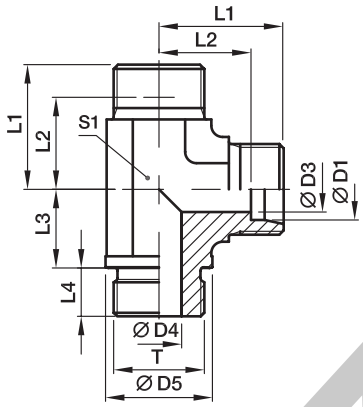

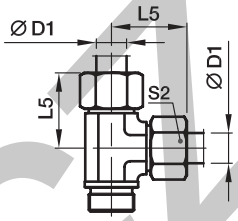

Series	D1	T	D3	D4	D5	L1	L2	L3	L4	L5	S1	S2	Weight g/1 piece	Order code*	PN (bar)[1] Steel	71
L[3])	22	M 26×1.5	19	18	31	35	27.5	26	16	44	27	36	225	**LE22LM**	160	160
	28	M 33×2.0	24	23	39	38	30.5	30	18	47	36	41	382	**LE28LM**	160	160
	35	M 42×2.0	30	30	49	45	34.5	34	20	56	41	50	583	**LE35LM**	160	160
	42	M 48×2.0	36	36	55	51	40.0	39	22	63	50	60	821	**LE42LM**	160	160
S[4])	20	M 27×2.0	16	16	32	37	26.5	26	16	48	27	36	264	**LE20SM**	400	400
	25	M 33×2.0	20	20	39	42	30.0	30	18	54	36	46	497	**LE25SM**	250	250
	30	M 42×2.0	25	25	49	49	35.5	34	20	62	41	50	744	**LE30SM**	160	160
	38	M 48×2.0	32	32	55	57	41.0	39	22	72	50	60	1111	**LE38SM**	160	160

[1]) Pressure shown = item deliverable

[3]) L = light series; [4]) S = heavy series

$\frac{\text{PN (bar)}}{10}$ = PN (MPa)

Delivery without nut and ring. Information on ordering complete fittings see page I7.

*Please add the **suffixes** below according to the material/surface required.

Order code suffixes		
Material	Suffix surface and material	Example
Steel	CFX	LE20SMCFX
Stainless Steel	71X	LE20SM71X

KOVAL.cz

LE-R Male stud run tee

EO 24° cone end / Male BSPP thread – metal sealing edge (ISO 1179)

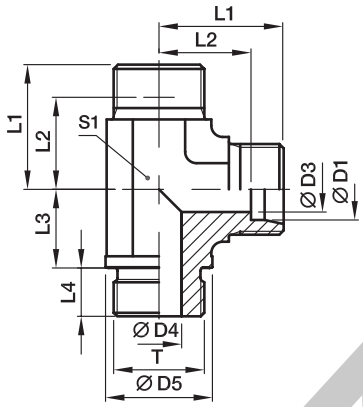

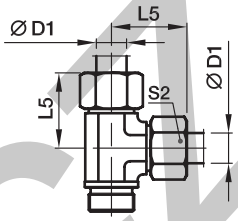

Series	D1	T	D3	D4	D5	L1	L2	L3	L4	L5	S1	S2	Weight g/1 piece	Order code*	PN (bar)[1] Steel	71
L[3])	22	G 3/4 A	19	18	32	35	27.5	26	16	44	27	36	225	**LE22LR**	160	160
	28	G 1 A	24	23	39	38	30.5	30	18	47	36	41	358	**LE28LR**	160	160
	35	G 1 1/4 A	30	30	49	45	34.5	34	20	56	41	50	583	**LE35LR**	160	160
	42	G 1 1/2 A	36	36	55	51	40.0	39	22	63	50	60	821	**LE42LR**	160	160
S[4])	20	G 3/4 A	16	16	32	37	26.5	26	16	48	27	36	259	**LE20SR**	400	400
	25	G 1 A	20	20	39	42	30.0	30	18	54	36	46	495	**LE25SR**	250	250
	30	G 1 1/4 A	25	25	49	49	35.5	34	20	62	41	50	744	**LE30SR**	160	160
	38	G 1 1/2 A	32	32	55	57	41.0	39	22	72	50	60	1111	**LE38SR**	160	160

[1]) Pressure shown = item deliverable

[3]) L = light series; [4]) S = heavy series

$\frac{\text{PN (bar)}}{10}$ = PN (MPa)

Delivery without nut and ring. Information on ordering complete fittings see page I7.

*Please add the **suffixes** below according to the material/surface required.

Order code suffixes		
Material	Suffix surface and material	Example
Steel	CFX	LE20SRCFX
Stainless Steel	71X	LE20SR71X

KOVAV.cz

LE-R (KEG) Male stud run tee

EO 24° cone end / Male short BSP taper thread (DIN 3852-2, type C)

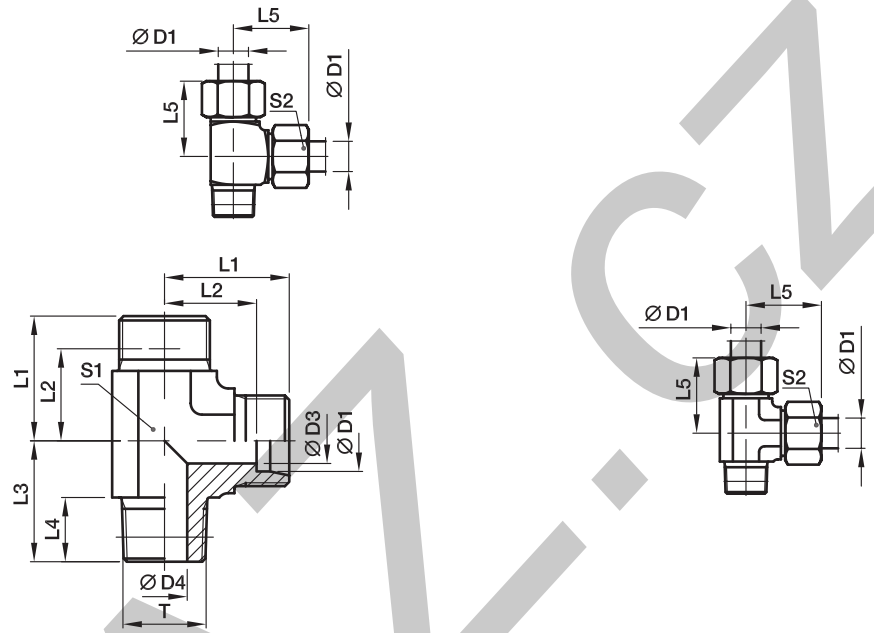

Series	D1	T	D3	D4	L1	L2	L3	L4	L5	S1	S2	Weight g/1 piece	Order code*	PN (bar)[1] Steel	71
LL[2])	04	R 1/8 tap.	3.0	4.0	15	11.0	17	8	21	9	10	20	**LE04LLR**	100	100
	06	R 1/8 tap.	4.5	4.5	15	9.5	17	8	21	9	12	21	**LE06LLR**	100	100
	08	R 1/8 tap.	6.0	6.0	17	11.5	20	8	23	12	14	28	**LE08LLR**	100	100
L[3])	06	R 1/8 tap.	4.0	4.0	19	12.0	20	8	27	12	14	40	**LE06LR**	315	315
	08	R 1/4 tap.	6.0	6.0	21	14.0	26	12	29	12	17	57	**LE08LR**	315	315
	10	R 1/4 tap.	8.0	7.0	22	15.0	27	12	30	14	19	50	**LE10LR**	315	315
	12	R 3/8 tap.	10.0	9.0	24	17.0	28	12	32	17	22	60	**LE12LR**	315	315
	15	R 1/2 tap.	12.0	11.0	28	21.0	34	14	36	19	27	115	**LE15LR**	315	315
	18	R 1/2 tap.	15.0	14.0	31	23.5	36	14	40	24	32	145	**LE18LR**	315	315
S[4])	06	R 1/4 tap.	4.0	4.0	23	16.0	26	12	31	12	17	71	**LE06SR**	400	400
	08	R 1/4 tap.	5.0	5.0	24	17.0	27	12	32	14	19	62	**LE08SR**	400	400
	10	R 3/8 tap.	7.0	7.0	25	17.5	28	12	34	17	22	82	**LE10SR**	400	400
	12	R 3/8 tap.	8.0	8.0	29	21.5	28	12	38	19*	24	102	**LE12SR**	400	400
	16	R 1/2 tap.	12.0	12.0	33	24.5	32	14	43	24	30	193	**LE16SR**	400	400

[1]) Pressure shown = item deliverable

[2]) LL = very light series; [3]) L = light series; [4]) S = heavy series

*S1 = 17 in 1.4571

$\frac{\text{PN (bar)}}{10}$ = PN (MPa)

Delivery without nut and ring. Information on ordering complete fittings see page I7.

*Please add the **suffixes** below according to the material/surface required.

Order code suffixes		
Material	Suffix surface and material	Example
Steel	CFX	LE16SRCFX
Stainless Steel	71X	LE16SR71X

KOMAZ.CZ

LE-M(KEG) Male stud run tee

EO 24° cone end / Male short metric taper thread (DIN 3852-1, Form C)

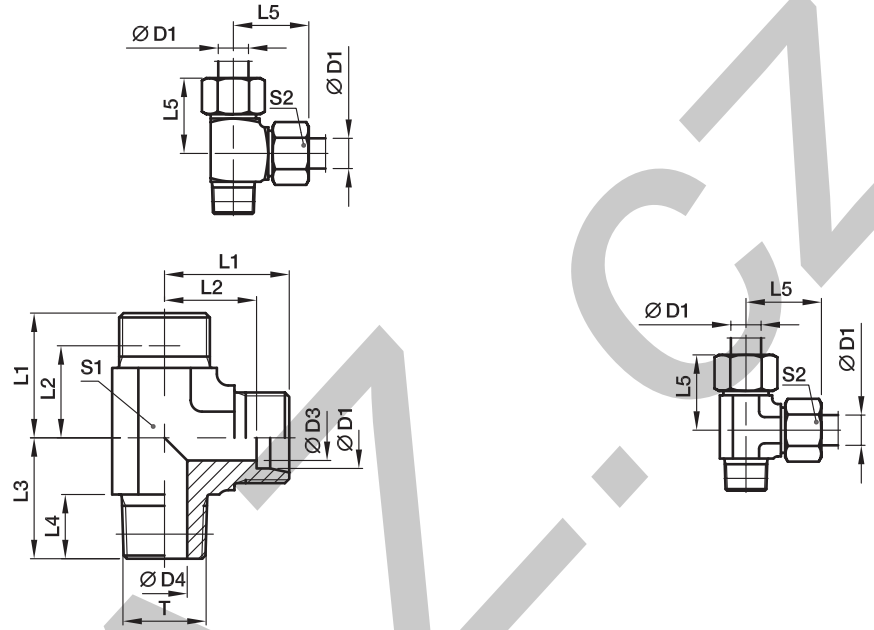

Series	D1	T	D3	D4	L1	L2	L3	L4	L5	S1	S2	Weight g/1 piece	Order code*	PN (bar)[1] Steel	PN (bar)[1] 71
LL[2])	04	M 08×1.0 tap.	3.0	3.5	15	11.0	17	8	21	9	10	17	**LE04LLM**	100	100
	06	M 10×1.0 tap.	4.5	4.5	15	9.5	17	8	21	9	12	21	**LE06LLM**	100	100
	08	M 10×1.0 tap.	6.0	6.0	17	11.5	20	8	23	12	14	29	**LE08LLM**	100	100
L[3])	06	M 10×1.0 tap.	4.0	4.0	19	12.0	20	8	27	12	14	38	**LE06LM**	315	315
	08	M 12×1.5 tap.	6.0	6.0	21	14.0	26	12	29	12	17	56	**LE08LM**	315	315
	10	M 14×1.5 tap.	8.0	7.0	22	15.0	27	12	30	14	19	47	**LE10LM**	315	315
	12	M 16×1.5 tap.	10.0	9.0	24	17.0	28	12	32	17	22	58	**LE12LM**	315	315
	15	M 18×1.5 tap.	12.0	11.0	28	21.0	32	12	36	19	27	98	**LE15LM**	315	315
	18	M 22×1.5 tap.	15.0	14.0	31	23.5	36	14	40	24	32	156	**LE18LM**	315	315
S[4])	06	M 12×1.5 tap.	4.0	4.0	23	16.0	26	12	31	12	17	70	**LE06SM**	400	400
	08	M 14×1.5 tap.	5.0	5.0	24	17.0	27	12	32	14	19	66	**LE08SM**	400	400
	10	M 16×1.5 tap.	7.0	7.0	25	17.5	28	12	34	17	22	123	**LE10SM**	400	400
	12	M 18×1.5 tap.	8.0	8.0	29	21.5	28	12	38	19*	24	169	**LE12SM**	400	400
	16	M 22×1.5 tap.	12.0	12.0	33	24.5	32	14	43	24	30	178	**LE16SM**	400	400

[1]) Pressure shown = item deliverable

[2]) LL = very light series; [3]) L = light series; [4]) S = heavy series

*S1 = 17 in 1.4571

$\frac{\text{PN (bar)}}{10}$ = PN (MPa)

Delivery without nut and ring. Information on ordering complete fittings see page I7.

*Please add the **suffixes** below according to the material/surface required.

Order code suffixes		
Material	Suffix surface and material	Example
Steel	CFX	LE16SMCFX
Stainless Steel	71X	LE16SM71X

KOMAZ.CZ

GAI-M Female connector

Female metric thread (ISO 9974-1) / EO 24° cone end

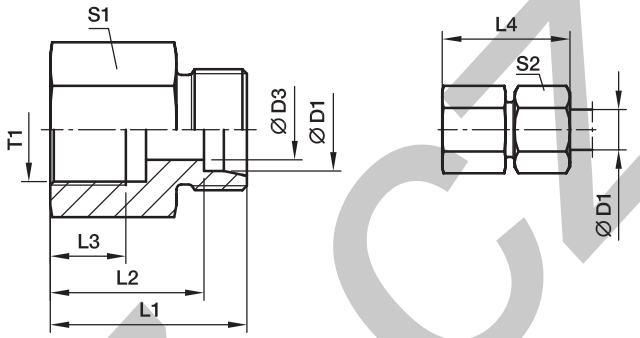

Series	D1	T1	D3	L1	L2	L3	L4	S1	S2	Weight g/1 piece	Order code*	PN (bar)[1] Steel	71
L[3])	06	M 10×1.0	4	26.5	19.5	8.0	34	14	14	18	**GAI06LM**	315	315
	08	M 12×1.5	6	31.0	24.0	12.0	39	17	17	32	**GAI08LM**	315	315
	10	M 14×1.5	8	32.0	25.0	12.0	40	19	19	39	**GAI10LM**	315	315
	12	M 16×1.5	10	33.0	26.0	12.0	41	22	22	52	**GAI12LM**	315	315
	15	M 18×1.5	12	35.0	28.0	12.0	43	24	27	68	**GAI15LM**	315	315
	18	M 22×1.5	15	37.0	29.5	14.0	46	30	32	111	**GAI18LM**	315	315
	22	M 26×1.5	19	42.0	34.5	16.0	51	32	36	123	**GAI22LM**	160	160
	28	M 33×2.0	24	45.0	37.5	18.0	54	41	41	211	**GAI28LM**	160	160
	35	M 42×2.0	30	51.0	40.5	20.0	62	55	50	459	**GAI35LM**	160	160
	42	M 48×2.0	36	53.0	42.0	22.0	65	60	60	522	**GAI42LM**	160	160
S[4])	06	M 12×1.5	4	33.0	26.0	12.0	41	17	17	35	**GAI06SM**	400	400
	08	M 14×1.5	5	33.0	26.0	12.0	41	17	19	42	**GAI08SM**	400	400
	10	M 16×1.5	7	34.0	26.5	12.0	43	22	22	58	**GAI10SM**	400	400
	12	M 18×1.5	8	35.0	27.5	12.0	44	24	24	70	**GAI12SM**	400	400
	16	M 22×1.5	12	39.0	30.5	14.0	49	30	30	114	**GAI16SM**	400	400
	20	M 27×2.0	16	45.0	34.5	16.0	56	36	36	189	**GAI20SM**	315	315
	25	M 33×2.0	20	49.0	37.0	18.0	61	41	46	235	**GAI25SM**	315	315
	30	M 42×2.0	25	55.0	41.5	20.0	68	55	50	490	**GAI30SM**	315	315
	38	M 48×2.0	32	59.0	43.0	22.0	74	60	60	597	**GAI38SM**	250	250

[1]) Pressure shown = item deliverable

[3]) L = light series; [4]) S = heavy series

$\frac{PN\ (bar)}{10} = PN\ (MPa)$

Delivery without nut and ring. Information on ordering complete fittings see page I7.

*Please add the **suffixes** below according to the material/surface required.

Order code suffixes		
Material	Suffix surface and material	Example
Steel	CFX	GAI16SMCFX
Stainless Steel	71X	GAI16SM71X

KOVAZ.CZ

GAI-R Female connector

Female BSPP thread (ISO 1179-1) / EO 24° cone end

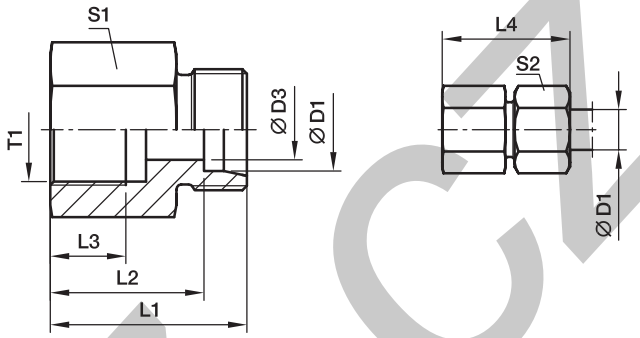

Series	D1	T1	D3	L1	L2	L3	L4	S1	S2	Weight g/1 piece	Order code*	PN (bar)[1] Steel	71	MS
L[3])	06	G 1/8	4	26.0	19.0	8.0	34	14	14	18	**GAI06LR**	315	315	200
	06	G 1/4	4	31.0	24.0	12.0	39	19	14	39	**GAI06LR1/4**	315	315	200
	08	G 1/4	6	31.0	24.0	12.0	39	19	17	39	**GAI08LR**	315	315	200
	08	G 3/8	6	32.0	25.0	12.0	40	24	17	61	**GAI08LR3/8**	315	315	200
	08	G 1/2	6	36.0	29.0	14.0	44	27	17	80	**GAI08LR1/2**	315	315	200
	10	G 1/4	8	32.0	25.0	12.0	40	19	19	40	**GAI10LR**	315	315	200
	10	G 3/8	8	33.0	26.0	12.0	41	24	19	63	**GAI10LR3/8**	315	315	200
	10	G 1/2	8	37.0	30.0	14.0	45	27	19	81	**GAI10LR1/2**	315	315	200
	12	G 3/8	10	33.0	26.0	12.0	41	24	22	64	**GAI12LR**	315	315	200
	12	G 1/2	10	37.0	30.0	14.0	45	27	22	83	**GAI12LR1/2**	315	315	200
	15	G 1/2	12	38.0	31.0	14.0	46	27	27	87	**GAI15LR**	315	315	200
	18	G 1/2	15	38.0	30.5	14.0	47	27	32	89	**GAI18LR**	315	315	200
	18	G 3/8	15	34.0	26.5	12.0	43	27	32	95	**GAI18LR3/8**	315	315	200
	22	G 3/4	19	43.0	35.5	16.0	52	36	36	173	**GAI22LR**	160	160	100
	28	G 1	24	45.5	38.0	18.0	55	41	41	211	**GAI28LR**	160	160	100
	35	G 1 1/4	30	51.5	41.0	20.0	63	55	50	469	**GAI35LR**	160	160	100
	42	G 1 1/2	36	53.5	42.5	22.0	65	60	60	540	**GAI42LR**	160	160	100
S[4])	06	G 1/4	4	33.0	26.0	12.0	41	19	17	43	**GAI06SR**	400	400	
	08	G 1/4	5	33.0	26.0	12.0	41	19	19	47	**GAI08SR**	400	400	
	10	G 3/8	7	34.0	26.5	12.0	43	24	22	68	**GAI10SR**	400	400	
	12	G 3/8	8	34.0	26.5	12.0	43	24	24	71	**GAI12SR**	400	400	
	12	G 1/2	8	38.0	30.5	14.0	47	30	24	121	**GAI12SR1/2**	400	400	
	16	G 1/2	12	40.0	31.5	14.0	50	30	30	126	**GAI16SR**	400	400	
	20	G 3/4	16	45.0	34.5	16.0	56	36	36	196	**GAI20SR**	315	315	
	25	G 1	20	49.5	37.5	18.0	62	41	46	246	**GAI25SR**	315	315	
	30	G 1 1/4	25	55.5	42.0	22.0	69	55	50	537	**GAI30SR**	315	315	
	38	G 1 1/2	32	59.5	43.5	22.0	74	60	60	649	**GAI38SR**	250	250	

[1]) Pressure shown = item deliverable

[3]) L = light series; [4]) S = heavy series

$\frac{\text{PN (bar)}}{10}$ = PN (MPa)

Delivery without nut and ring. Information on ordering complete fittings see page I7.

*Please add the **suffixes** below according to the material/surface required.

Order code suffixes		
Material	Suffix surface and material	Example
Steel	CFX	GAI16SRCFX
Stainless Steel	71X	GAI16SR71X
Brass	MSX	GAI16SRMSX

GAI-NPT Female connector

Female NPT thread (SAE 476) / EO 24° cone end

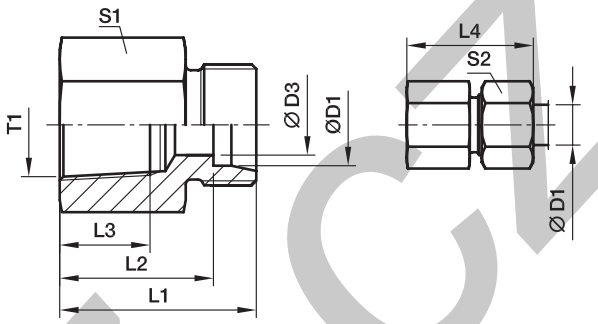

Series	D1	T1	D3	L1	L2	L3	L4	S1	S2	Weight g/1 piece	Order code*	PN (bar)[1] Steel	71
L[3])	06	1/8-27 NPT	4	26.0	19.0	11.6	34	14	14	19	**GAI06L1/8NPT**	315	315
	06	1/4-18 NPT	4	30.5	23.5	16.4	38	19	14	38	**GAI06L1/4NPT**	315	315
	08	1/4-18 NPT	6	30.5	23.5	16.4	38	19	17	39	**GAI08L1/4NPT**	315	315
	10	1/4-18 NPT	8	31.0	24.0	16.4	39	19	19	40	**GAI10L1/4NPT**	315	315
	12	3/8-18 NPT	10	34.0	27.0	17.4	42	24	22	69	**GAI12L3/8NPT**	315	315
	12	1/2-14 NPT	10	39.0	32.0	22.6	47	27	22	91	**GAI12L1/2NPT**	315	315
	15	1/2-14 NPT	12	40.0	33.0	22.6	48	27	27	96	**GAI15L1/2NPT**	315	315
	18	1/2-14 NPT	15	40.0	32.5	22.6	49	27	32	99	**GAI18L1/2NPT**	315	315
	22	3/4-14 NPT	19	43.0	35.5	23.1	52	36	36	184	**GAI22L3/4NPT**	160	160
	28	1-11.5 NPT	24	48.0	40.5	27.8	57	41	41	238	**GAI28L1NPT**	160	160
	35	1 1/4-11.5 NPT	30	51.0	40.5	28.3	62	55	50	424	**GAI35L11/4NPT**	160	160
	42	1 1/2-11.5 NPT	36	53.0	42.0	28.3	65	60	60	547	**GAI42L11/2NPT**	160	160
S[4])	06	1/8-27 NPT	4	29.0	22.0	11.6	36	14	17	25	**GAI06S1/8NPT**	400	400
	06	1/4-18 NPT	4	33.0	26.0	16.4	41	19	17	41	**GAI06S1/4NPT**	400	400
	08	1/4-18 NPT	5	33.0	26.0	16.4	41	19	19	42	**GAI08S1/4NPT**	400	400
	10	3/8-18 NPT	7	35.0	27.0	17.4	44	24	22	74	**GAI10S3/8NPT**	400	400
	12	1/4-18 NPT	8	32.5	25.0	16.4	41	22	24	81	**GAI12S1/4NPT**	400	400
	12	3/8-18 NPT	8	35.0	27.5	17.4	44	24	24	76	**GAI12S3/8NPT**	400	400
	12	1/2-14 NPT	8	41.0	33.5	22.6	50	27	24	101	**GAI12S1/2NPT**	400	400
	16	1/2-14 NPT	12	43.0	34.5	22.6	50	27	30	111	**GAI16S1/2NPT**	400	400
	20	1/2-14 NPT	16	44.0	33.5	22.6	55	32	36	129	**GAI20S1/2NPT**	315	315
	20	3/4-14 NPT	16	46.0	35.5	23.1	57	36	36	214	**GAI20S3/4NPT**	315	315
	25	1-11.5 NPT	20	53.0	41.0	27.8	65	41	46	288	**GAI25S1NPT**	315	315
	30	1 1/4-11.5 NPT	25	57.0	43.5	28.3	70	55	50	559	**GAI30S11/4NPT**	315	315
	38	1 1/2-11.5 NPT	32	59.0	43.0	28.3	74	60	60	632	**GAI38S11/2NPT**	250	250

[1]) Pressure shown = item deliverable

[3]) L = light series; [4]) S = heavy series

$\frac{\text{PN (bar)}}{10}$ = PN (MPa)

Delivery without nut and ring. Information on ordering complete fittings see page I7.

*Please add the **suffixes** below according to the material/surface required.

Order code suffixes		
Material	Suffix surface and material	Example
Steel	CFX	GAI16S1/2NPTCFX
Stainless Steel	71X	GAI16S1/2NPT71X

RI-ED Thread reducer/expander

Male BSPP thread – ED-seal (ISO 1179) / Female BSPP thread (ISO 1179-1)

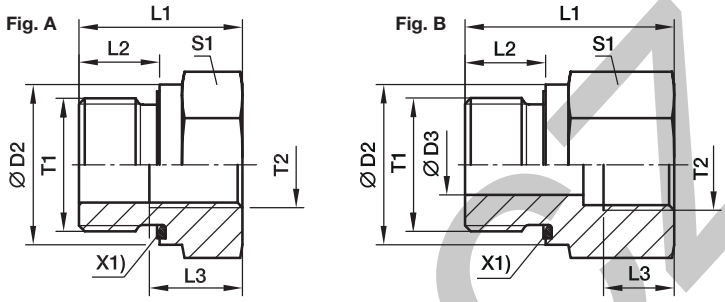

X1) Eolastic-sealing ED

Male Stud T1	Female Stud T2	D2	D3	L1	L2	L3	S1	Fig.	Weight g/1 piece	Order code*	PN (bar)[1] Steel	PN (bar)[1] 71
G 1/8 A	G 1/4	14	4	31.0	8	12.0	19	B	41	**RI1/8EDX1/4**	400	400
G 1/8 A	G 3/8	14	4	32.0	8	12.0	24	B	63	**RI1/8EDX3/8**	400	400
G 1/4 A	G 1/8	19	5	29.0	12	8.0	19	B	41	**RI1/4EDX1/8**	400	400
G 1/4 A	G 3/8	19	5	36.0	12	12.0	24	B	69	**RI1/4EDX3/8**	400	400
G 1/4 A	G 1/2	19	5	40.0	12	14.0	30	B	120	**RI1/4EDX1/2**	400	400
G 1/4 A	G 3/4	19	5	43.0	12	16.0	36	B	171	**RI1/4EDX3/4**	400	400
G 3/8 A	G 1/8	22		22.5	12	8.0	22	A	38	**RI3/8EDX1/8**	400	400
G 3/8 A	G 1/4	22	8	36.0	12	12.0	22	B	68	**RI3/8EDX1/4**	400	400
G 3/8 A	G 1/2	22	8	41.0	12	14.0	30	B	124	**RI3/8EDX1/2**	400	400
G 3/8 A	G 3/4	22	8	44.0	12	16.0	36	B	182	**RI3/8EDX3/4**	315	315
G 1/2 A	G 1/8	27		24.0	14	8.0	27	A	65	**RI1/2EDX1/8**	400	400
G 1/2 A	G 1/4	27		24.0	14	12.0	27	A	56	**RI1/2EDX1/4**	400	400
G 1/2 A	G 3/8	27	12	37.0	14	12.0	27	B	95	**RI1/2EDX3/8**	400	400
G 1/2 A	G 3/4	27	12	46.0	14	16.0	36	B	183	**RI1/2EDX3/4**	315	315
G 1/2 A	G 1	27	12	49.0	14	18.0	41	B	232	**RI1/2EDX1**	315	315
G 1/2 A	G 1 1/4	27	10	53.0	14	20.0	55	B	481	**RI1/2EDX11/4**	315	315
G 3/4 A	G 1/4	32		26.0	16	12.0	32	A	103	**RI3/4EDX1/4**	315	315
G 3/4 A	G 3/8	32		26.0	16	12.0	32	A	86	**RI3/4EDX3/8**	315	315
G 3/4 A	G 1/2	32	16	43.0	16	14.0	32	B	156	**RI3/4EDX1/2**	315	315
G 3/4 A	G 1	32	16	51.0	16	18.0	41	B	237	**RI3/4EDX1**	315	315
G 3/4 A	G 1 1/4	32	16	55.0	16	20.0	55	B	486	**RI3/4EDX11/4**	315	315
G 3/4 A	G 1 1/2	32	16	57.0	16	22.0	60	B	561	**RI3/4EDX11/2**	250	250
G 1 A	G 1/4	40		29.0	18	12.0	41	A	197	**RI1EDX1/4**	315	315
G 1 A	G 3/8	40		29.0	18	12.0	41	A	179	**RI1EDX3/8**	315	315
G 1 A	G 1/2	40		29.0	18	14.0	41	A	153	**RI1EDX1/2**	315	315
G 1 A	G 3/4	40	20	49.0	18	16.0	41	B	290	**RI1EDX3/4**	315	315
G 1 A	G 1 1/4	40	20	57.0	18	20.0	55	B	503	**RI1EDX11/4**	315	315
G 1 A	G 1 1/2	40	20	59.0	18	22.0	60	B	585	**RI1EDX11/2**	250	250
G 1 1/4 A	G 1/2	50		32.0	20	14.0	50	A	313	**RI11/4EDX1/2**	315	315
G 1 1/4 A	G 3/4	50		32.0	20	16.0	50	A	393	**RI11/4EDX3/4**	315	315
G 1 1/4 A	G 1	50	25	52.0	20	18.0	50	B	469	**RI11/4EDX1**	315	315
G 1 1/4 A	G 1 1/2	50	25	60.0	20	22.0	60	B	624	**RI11/4EDX11/2**	250	250
G 1 1/2 A	G 1/2	55		36.0	22	14.0	55	A	470	**RI11/2EDX1/2**	250	250
G 1 1/2 A	G 3/4	55		36.0	22	16.0	55	A	415	**RI11/2EDX3/4**	250	250
G 1 1/2 A	G 1	55		36.0	22	18.0	55	A	338	**RI11/2EDX1**	250	250
G 1 1/2 A	G 1 1/4	55	32	58.0	22	20.0	55	B	542	**RI11/2EDX11/4**	250	250
G 2 A	G 1 1/2	75	40	65.0	24	22.0	75	B	1309	**RI2EDX11/2**	160	160

[1]) Pressure shown = item deliverable

$\frac{PN\ (bar)}{10} = PN\ (MPa)$

Information on ordering alternative sealing materials see page I7.

*Please add the **suffixes** below according to the material/surface required.

Order code suffixes			
Material	Suffix surface and material	Example	Standard sealing material (no additonal. suffix needed)
Steel	CF	RI1EDX1/2CF	NBR
Stainless Steel	71	RI1EDX1/271	VIT

KOVAL

RI Thread reducer/expander

Male BSPP thread – metal sealing edge (ISO 1179) / Female BSPP thread (ISO 1179-1)

Fig. A

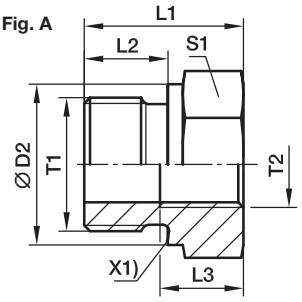

Fig. B

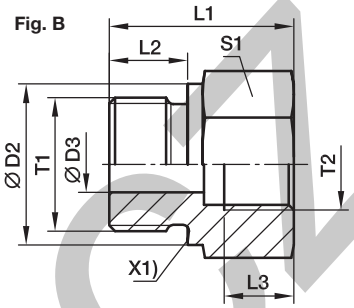

X1) metal sealing edge

Male Stud T1	Female Stud T2	D2	D3	L1	L2	L3	S1	Fig.	Weight g/1 piece	Order code*	PN (bar)[1] Steel	71	MS
G 1/8 A	G 1/4	14	4	31.0	8	12.0	19	B	42	**RI1/8X1/4**	400	400	250
G 1/8 A	G 3/8	14	4	32.0	8	12.0	24	B	63	**RI1/8X3/8**	400	400	250
G 1/4 A	G 1/8	18	5	28.0	12	8.0	19	B	38	**RI1/4X1/8**	400	400	250
G 1/4 A	G 3/8	18	5	36.0	12	12.0	24	B	69	**RI1/4X3/8**	400	400	250
G 1/4A	G 1/2	18	5	40.0	12	14.0	30	B	116	**RI1/4X1/2**	400	400	250
G 1/4 A	G 3/4	18	5	43.0	12	16.0	36	B	170	**RI1/4X3/4**	315	315	200
G 3/8 A	G 1/8	22		22.5	12	8.0	22	A	39	**RI3/8X1/8**	400	400	250
G 3/8 A	G 1/4	22	8	36.0	12	12.0	22	B	68	**RI3/8X1/4**	400	400	250
G 3/8 A	G 1/2	22	8	41.0	12	14.0	30	B	125	**RI3/8X1/2**	400	400	250
G 3/8 A	G 3/4	22	8	44.0	12	16.0	36	B	183	**RI3/8X3/4**	315	315	200
G 1/2 A	G 1/8	26		24.0	14	8.0	27	A	66	**RI1/2X1/8**	400	400	250
G 1/2 A	G 1/4	26		24.0	14	12.0	27	A	56	**RI1/2X1/4**	315	315	200
G 1/2 A	G 3/8	26	12	37.0	14	12.0	27	B	94	**RI1/2X3/8**	315	315	200
G 1/2 A	G 3/4	26	12	46.0	14	16.0	36	B	182	**RI1/2X3/4**	315	315	200
G 1/2 A	G 1	26	12	49.0	14	18.0	41	B	221	**RI1/2X1**	315	315	200
G 1/2 A	G 1 1/4	26	10	53.0	14	20.0	55	B	482	**RI1/2X11/4**	160	160	
G 3/4 A	G 1/4	32		26.0	16	12.0	32	A	103	**RI3/4X1/4**	315	315	200
G 3/4 A	G 3/8	32		26.0	16	12.0	32	A	87	**RI3/4X3/8**	315	315	200
G 3/4 A	G 1/2	32	16	40.0	16	14.0	32	B	143	**RI3/4X1/2**	315	315	200
G 3/4 A	G 1	32	16	51.0	16	18.0	41	B	235	**RI3/4X1**	315	315	200
G 3/4 A	G 1 1/4	32	16	55.0	16	20.0	55	B	481	**RI3/4X11/4**	160	160	
G 3/4 A	G 1 1/2	32	16	57.0	16	22.0	60	B	560	**RI3/4X11/2**	160	160	
G 1 A	G 1/4	39		29.0	18	12.0	41	A	195	**RI1X1/4**	315	315	
G 1 A	G 3/8	39		29.0	18	12.0	41	A	179	**RI1X3/8**	315	315	200
G 1 A	G 1/2	39		29.0	18	14.0	41	A	157	**RI1X1/2**	315	315	200
G 1 A	G 3/4	39	20	47.0	18	16.0	41	B	278	**RI1X3/4**	315	315	200
G 1 A	G 1 1/4	39	20	57.0	18	20.0	55	B	530	**RI1X11/4**	160	160	100
G 1 A	G 1 1/2	39	20	59.0	18	22.0	60	B	585	**RI1X11/2**	160	160	100
G 1 1/4 A	G 1/2	49		32.0	20	14.0	50	A	308	**RI11/4X1/2**	160	160	100
G 1 1/4 A	G 3/4	49		32.0	20	16.0	50	A	267	**RI11/4X3/4**	160	160	100
G 1 1/4 A	G 1	49	25	52.0	20	18.0	50	B	458	**RI11/4X1**	160	160	100
G 1 1/4 A	G 1 1/2	49	25	60.0	20	22.0	60	B	616	**RI11/4X11/2**	160	160	100
G 1 1/2 A	G 1/2	55		36.0	22	14.0	55	A	477	**RI11/2X1/2**	160	160	100
G 1 1/2 A	G 3/4	55		36.0	22	16.0	55	A	402	**RI11/2X3/4**	160	160	100
G 1 1/2 A	G 1	55		36.0	22	18.0	55	A	337	**RI11/2X1**	160	160	100
G 1 1/2 A	G 1 1/4	55	32	58.0	22	20.0	55	B	542	**RI11/2X11/4**	160	160	100
G 2 A	G 1 1/2	68	40	62.0	24	22.0	70	B	990	**RI2X11/2**	160	160	

[1]) Pressure shown = item deliverable

$\frac{\text{PN (bar)}}{10}$ = PN (MPa)

*Please add the **suffixes** below according to the material/surface required.

Order code suffixes		
Material	Suffix surface and material	Example
Steel	CFX	RI1X1/2CFX
Stainless Steel	71X	RI1X1/271X
Brass	MSX	RI1X1/2MSX

MAV Pressure gauge connector

Female BSPP thread / EO 24° cone end
Port acc. to ISO 1179-1

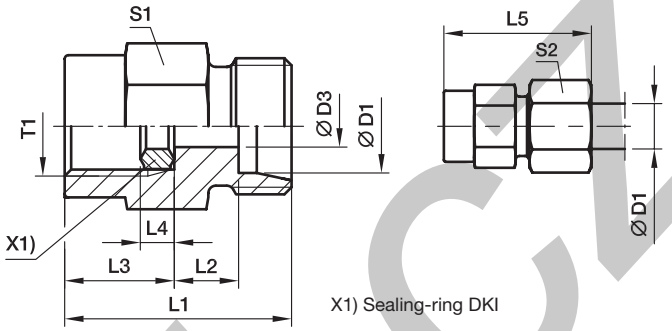

X1) Sealing-ring DKI

Series	D1	T1	D3	L1	L2	L3	L4	L5	S1	S2	Weight g/1 piece	Order code*	PN (bar)[1] Steel	71	MS
LL[2])	04	G 1/4	2.5	27	7.5	15.5	4.5	33	19	10	33	**MAV04LLROMD**	100		
L[3])	06	G 1/4	2.5	29	6.5	15.5	4.5	37	19	14	37	**MAV06LROMD**	500	315	200
	08	G 1/4	5.5	29	6.5	15.5	4.5	37	19	17	38	**MAV08LROMD**	500	315	200
	10	G 1/4	5.5	30	6.5	15.5	4.5	38	19	19	41	**MAV10LROMD**	500	315	200
	12	G 1/4	5.5	30	6.5	15.5	4.5	38	19	22	43	**MAV12LROMD**	400	315	200
S[4])	06	G 1/2	3.5	38	11.0	20.0	5.0	46	27	17	86	**MAV06SROMD**	630	630	400
	08	G 1/2	3.5	38	11.0	20.0	5.0	46	27	19	86	**MAV08SROMD**	630	630	400
	10	G 1/2	7.5	38	10.5	20.0	5.0	47	27	22	88	**MAV10SROMD**	630	630	400
	12	G 1/2	7.5	38	10.5	20.0	5.0	47	27	24	93	**MAV12SROMD**	630	630	400

[1]) Pressure shown = item deliverable

[2]) LL = very light series; [3]) L = light series; [4]) S = heavy series

$\frac{\text{PN (bar)}}{10}$ = PN (MPa)

Delivery without nut and ring. Information on ordering complete fittings see page I7.

*Please add the **suffixes** below according to the material/surface required.

Order code suffixes		
Material	Suffix surface and material	Example
Steel	CF	MAV10SROMDCF
Stainless Steel	71	MAV10SROMD71
Brass	MS	MAV10SROMDMS

KOVAZ.cz

MAVE Pressure gauge swivel connector

Female BSPP thread / EO 24° DKO swivel
Port acc. to ISO 1179-1

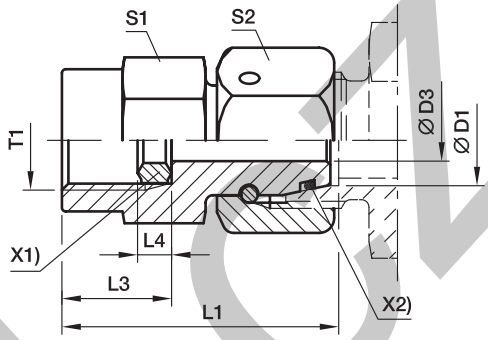

X1) Sealing-ring DKI
X2) O-ring OR

Series	D1	T1	D3	L1	L3	L4	S1	S2	Weight g/1 piece	Order code*	PN (bar)[1] Steel	71
L[3]	06	G 1/4	2.5	35.5	15.5	4.5	19	14	46	**MAVE06LR**	500	315
	08	G 1/4	4.0	35.5	15.5	4.5	19	17	52	**MAVE08LR**	500	315
	10	G 1/4	5.5	36.0	15.5	4.5	19	19	59	**MAVE10LR**	500	315
	12	G 1/4	5.5	36.0	15.5	4.5	19	22	70	**MAVE12LR**	400	315
S[4]	06	G 1/2	2.5	42.5	20.0	5.0	27	17	95	**MAVE06SR**	630	630
	06	G 1/4	2.5	35.5	15.5	4.5	19	17	52	**MAVE06SR1/4**	630	630
	08	G 1/2	4.0	43.0	20.0	5.0	27	19	100	**MAVE08SR**	630	630
	08	G 1/4	4.0	35.5	15.5	4.5	19	19	58	**MAVE08SR1/4**	630	630
	10	G 1/2	6.0	43.5	20.0	5.0	27	22	109	**MAVE10SR**	630	630
	10	G 1/4	7.0	39.0	15.5	4.5	19	22	67	**MAVE10SR1/4**	630	630
	12	G 1/2	7.0	45.0	20.0	5.0	27	24	125	**MAVE12SR**	630	630
	12	G 1/4	7.0	39.0	15.5	4.5	19	24	83	**MAVE12SR1/4**	630	630

[1]) Pressure shown = item deliverable
[3]) L = light series; [4]) S = heavy series

$\frac{PN\ (bar)}{10}$ = PN (MPa)

Information on ordering alternative sealing materials see page I7.

*Please add the **suffixes** below according to the material/surface required.

Order code suffixes			
Material	Suffix surface and material	Example	Standard sealing material (no additonal. suffix needed)
Steel	CF	MAVE10SRCF	NBR
Stainless Steel	71	MAVE10SR71	VIT

KOVAL.cz

ROV Blanking plug for tube ends

EO 24°cone end

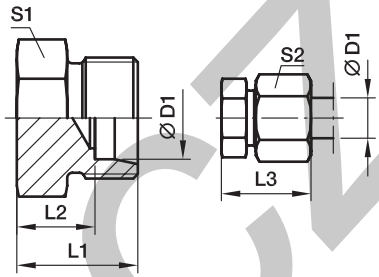

Series	D1	L1	L2	L3	S1	S2	Weight g/1 piece	Order code*	PN (bar)[1] Steel	PN (bar)[1] 71
L[3])	06	14	7.0	22	12	14	8	**ROV06L**	315	315
	08	15	8.0	23	14	17	13	**ROV08L**	315	315
	10	16	9.0	24	17	19	17	**ROV10L**	315	315
	12	17	10.0	25	19	22	24	**ROV12L**	315	315
	15	18	11.0	26	24	27	41	**ROV15L**	315	315
	18	19	11.5	28	27	32	56	**ROV18L**	315	315
	22	21	13.5	30	32	36	84	**ROV22L**	160	160
	28	22	14.5	31	41	41	138	**ROV28L**	160	160
	35	25	14.5	36	46	50	203	**ROV35L**	160	160
	42	27	16.0	39	55	60	318	**ROV42L**	160	160
S[4])	06	18	11.0	26	14	17	17	**ROV06S**	630	630
	08	20	13.0	28	17	19	28	**ROV08S**	630	630
	10	20	12.5	29	19	22	33	**ROV10S**	630	630
	12	22	14.5	31	22	24	50	**ROV12S**	630	630
	16	24	15.5	34	27	30	75	**ROV16S**	400	400
	20	28	17.5	39	32	36	125	**ROV20S**	400	400
	25	32	20.0	44	41	46	229	**ROV25S**	400	400
	30	34	20.5	47	46	50	310	**ROV30S**	400	400
	38	39	23.0	54	55	60	508	**ROV38S**	315	315

[1]) Pressure shown = item deliverable

[3]) L = light series; [4]) S = heavy series

$\frac{\text{PN (bar)}}{10}$ = PN (MPa)

Delivery without nut and ring. Information on ordering complete fittings see page I7.

*Please add the **suffixes** below according to the material/surface required.

Order code suffixes		
Material	Suffix surface and material	Example
Steel	CFX	ROV16SCFX
Stainless Steel	71X	ROV16S71X

KOVAZ.CZ

VSTI M-OR Blanking plug for ports

Male metric thread – O-ring (ISO 6149)

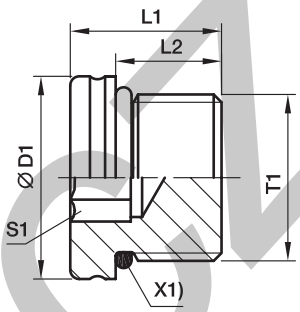

X1) O-ring OR

T1	D1	L1	L2	S1	Weight g/1 piece	Order code*	PN (bar)[1) Steel
M 08×1.0	12	13.0	9.5	4	6	**VSTI8X1OR**	630
M 10×1.0	13	13.5	9.5	5	8	**VSTI10X1OR**	630
M 12×1.5	17	15.0	11.0	6	14	**VSTI12X1.5OR**	630
M 14×1.5	19	16.0	11.0	6	20	**VSTI14X1.5OR**	630
M 16×1.5	21	17.5	12.5	8	26	**VSTI16X1.5OR**	630
M 18×1.5	23	19.0	14.0	8	37	**VSTI18X1.5OR**	630
M 22×1.5	27	20.0	15.0	10	58	**VSTI22X1.5OR**	630
M 26×1.5	31	21.0	16.0	12	77	**VSTI26X1.5OR**	400
M 27×2.0	32	23.5	18.5	12	95	**VSTI27X2OR**	400
M 33×2.0	38	25.0	18.5	14	148	**VSTI33X2OR**	400
M 42×2.0	48	25.5	19.0	22	233	**VSTI42X2OR**	400
M 48×2.0	55	28.0	21.5	24	336	**VSTI48X2OR**	400

[1) Pressure shown = item deliverable

$\frac{PN\ (bar)}{10} = PN\ (MPa)$

Information on ordering alternative sealing materials see page I7.

*Please add the **suffixes** below according to the material/surface required.

Order code suffixes			
Material	Suffix surface and material	Example	Standard sealing material (no additonal. suffix needed)
Steel	CF	VSTI18X1.5ORCF	NBR

KOVAZ.CZ

VSTI M/R-ED Blanking plug for ports

Male metric thread – ED-seal (ISO 9974)
Male BSPP thread – ED-seal (ISO 1179)

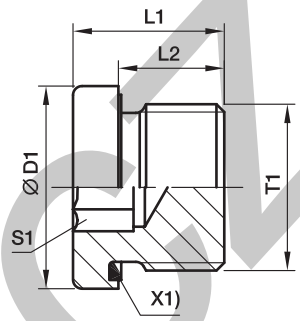

X1) Eolastic-sealing ED

Male metric parallel thread T1	Male stud BSP thread T1	D1	L1	L2	S1	Weight g/1 piece	Order code*	Order code*	PN (bar)[1] Steel	71
M 10×1.0	G 1/8 A	14.0	12.3	8	5	8	**VSTI10X1ED**	**VSTI1/8ED**	400	400
M 12×1.5		17.0	17.3	12	6	14	**VSTI12X1.5ED**		400	400
M 14×1.5	G 1/4 A	19.0	17.3	12	6	20	**VSTI14X1.5ED**	**VSTI1/4ED**	400	400
M 16×1.5	G 3/8 A	22.0	17.3	12	8	25	**VSTI16X1.5ED**	**VSTI3/8ED**	400	400
M 18×1.5		24.0	17.3	12	8	32	**VSTI18X1.5ED**		400	400
M 20×1.5		26.0	19.3	14	10	42	**VSTI20X1.5ED**		400	400
M 22×1.5	G 1/2 A	27.0	19.3	14	10	51	**VSTI22X1.5ED**	**VSTI1/2ED**	400	400
M 26×1.5		32.0	21.3	16	12	78	**VSTI26X1.5ED**		400	400
M 27×2.0	G 3/4 A	32.0	21.3	16	12	79	**VSTI27X2ED**	**VSTI3/4ED**	400	400
M 33×2.0	G 1 A	40.0	22.8	16	17	130	**VSTI33X2ED**	**VSTI1ED**	400	400
M 42×2.0	G 1 1/4 A	50.0	22.8	16	22	198	**VSTI42X2ED**	**VSTI11/4ED**	315	315
M 48×2.0	G 1 1/2 A	55.0	22.8	16	24	263	**VSTI48X2ED**	**VSTI11/2ED**	315	315

[1]) Pressure shown = item deliverable

$\frac{PN\ (bar)}{10} = PN\ (MPa)$

Information on ordering alternative sealing materials see page I7.

*Please add the **suffixes** below according to the material/surface required.

Order code suffixes			
Material	Suffix surface and material	Example	Standard sealing material (no additonal. suffix needed)
Steel	CF	VSTI1/2EDCF	NBR
Stainless Steel	71	VSTI1/2ED71	VIT

KOVAI-GI

VKA Blanking plug for cones

EO 24° DKO swivel

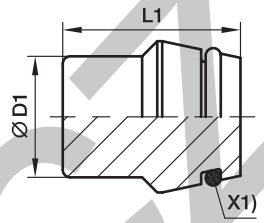

X1) O-ring OR

Series	D1	L1	Weight g/1 piece	Order code*	PN (bar)[1] Steel	71	MS
L[3])	06	18.5	6	**VKA06**	500	315	200
	08	18.5	9	**VKA08**	500	315	200
	10	20.0	15	**VKA10**	500	315	200
	12	20.5	21	**VKA12**	400	315	200
	15	20.5	32	**VKA15**	400	315	200
	18	22.5	49	**VKA18**	400	315	200
	22	25.0	80	**VKA22**	250	160	100
	28	25.5	131	**VKA28**	250	160	100
	35	30.0	240	**VKA35**	250	160	100
	42	30.0	343	**VKA42**	250	160	100
S[4])	06	18.5	6	**VKA06**	800	630	400
	08	18.5	9	**VKA08**	800	630	400
	10	20.0	15	**VKA10**	800	630	400
	12	20.5	21	**VKA12**	630	630	400
	16	23.5	40	**VKA16**	630	400	250
	20	28.5	78	**VKA20**	420	400	250
	25	29.0	120	**VKA25**	420	400	250
	30	30.5	180	**VKA30**	420	400	250
	38	33.0	309	**VKA38**	420	315	200

[1]) Pressure shown = item deliverable

[3]) L = light series; [4]) S = heavy series

$\frac{\text{PN (bar)}}{10}$ = PN (MPa)

Information on ordering alternative sealing materials see page I7.

*Please add the **suffixes** below according to the material/surface required.

Order code suffixes			
Material	Suffix surface and material	Example	Standard sealing material (no additonal. suffix needed)
Steel	CF	VKA16CF	NBR
Stainless Steel	71	VKA1671	VIT
Brass	MS	VKA16MS	NBR

KOVAL.cz

VKAM Blanking plug with nut for cone

EO 24° DKO swivel

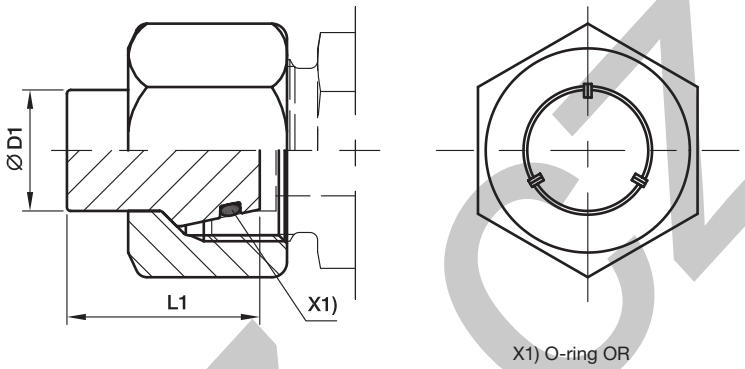

Series	D1	L1	Weight g/1 piece	Order code*	PN (bar)[1] Steel	71
L[3])	06	18.5	15	**VKAM06L**	500	315
	08	18.5	24	**VKAM08L**	500	315
	10	20.0	33	**VKAM10L**	500	315
	12	20.5	46	**VKAM12L**	400	315
	15	20.5	73	**VKAM15L**	400	315
	18	22.5	111	**VKAM18L**	400	315
	22	25.0	162	**VKAM22L**	250	160
	28	25.5	220	**VKAM28L**	250	160
	35	30.0	376	**VKAM35L**	250	160
	42	30.0	558	**VKAM42L**	250	160
S[4])	06	18.5	23	**VKAM06S**	800	630
	08	18.5	29	**VKAM08S**	800	630
	10	20.0	46	**VKAM10S**	800	630
	12	20.5	55	**VKAM12S**	630	630
	16	23.5	106	**VKAM16S**	630	400
	20	28.5	180	**VKAM20S**	420	400
	25	29.0	322	**VKAM25S**	420	400
	30	30.5	398	**VKAM30S**	420	400
	38	33.0	647	**VKAM38S**	420	315

[1]) Pressure shown = item deliverable

[3]) L = light series; [4]) S = heavy series

$\frac{\text{PN (bar)}}{10}$ = PN (MPa)

Information on ordering alternative sealing materials see page I7.

*Please add the **suffixes** below according to the material/surface required.

Order code suffixes			
Material	Suffix surface and material	Example	Standard sealing material (no additonal. suffix needed)
Steel	CF	VKAM16SCF	NBR
Stainless Steel	71	VKAM16S71	VIT

KOVZ.CZ

GM Locknut for bulk heads

For bulkhead SV and WSV

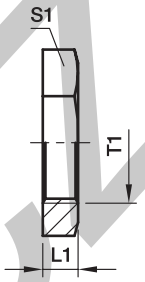

Series	Tube O.D.	T1	L1	S1	Weight g/1 piece	Order code Steel	Stainless Steel 71	Brass MS
L[3])	06	M 12×1.5	6	17	7	**GM06LCFX**	**GM06L71X**	**GM06LMSX**
	08	M 14×1.5	6	19	8	**GM08LCFX**	**GM08L71X**	**GM08LMSX**
	10	M 16×1.5	6	22	11	**GM10LCFX**	**GM10L71X**	**GM10LMSX**
	12	M 18×1.5	6	24	12	**GM12LCFX**	**GM12L71X**	**GM12LMSX**
	15	M 22×1.5	7	30	23	**GM15LCFX**	**GM15L71X**	**GM15LMSX**
	18	M 26×1.5	8	36	37	**GM18LCFX**	**GM18L71X**	**GM18LMSX**
	22	M 30×2.0	8	41	46	**GM22LCFX**	**GM22L71X**	**GM22LMSX**
	28	M 36×2.0	9	46	58	**GM28LCFX**	**GM28L71X**	**GM28LMSX**
	35	M 45×2.0	9	55	71	**GM35LCFX**	**GM35L71X**	**GM35LMSX**
	42	M 52×2.0	10	65	123	**GM42LCFX**	**GM42L71X**	**GM42LMSX**
S[4])	06	M 14×1.5	6	19	8	**GM08LCFX**	**GM08L71X**	**GM06LMSX**
	08	M 16×1.5	6	22	11	**GM10LCFX**	**GM10L71X**	**GM10LMSX**
	10	M 18×1.5	6	24	12	**GM12LCFX**	**GM12L71X**	**GM12LMSX**
	12	M 20×1.5	6	27	15	**GM12SCFX**	**GM12S71X**	**GM12SMSX**
	16	M 24×1.5	7	32	24	**GM16SCFX**	**GM16S71X**	**GM16SMSX**
	20	M 30×2.0	8	41	46	**GM22LCFX**	**GM22L71X**	**GM22LMSX**
	25	M 36×2.0	9	46	58	**GM28LCFX**	**GM28L71X**	**GM28LMSX**
	30	M 42×2.0	9	50	58	**GM30SCFX**	**GM30S71X**	**GM30SMSX**
	38	M 52×2.0	10	65	123	**GM42LCFX**	**GM42L71X**	**GM42LMSX**

[3]) L = light series; [4]) S = heavy series

KOVAZ.CZ

VH Support sleeve

for thin-walled metal tubing

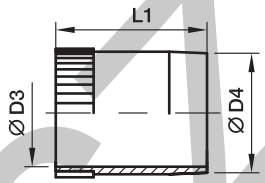

Tube I.D.	D3	D4	L1	Weight g/1 piece	Order code Steel	Stainless Steel 71	Brass MS
4.00	2.6	3.8	14.0	0.7	**VH04CFX**	**VH0471X**	**VH04MSX**
4.50	3.1	4.3	14.0	0.8	**VH04.5CFX**	**VH04.571X**	**VH04.5MSX**
5.00	3.6	4.8	14.0	0.8	**VH05CFX**	**VH0571X**	**VH05MSX**
6.00	4.6	5.8	14.0	1.0	**VH06CFX**	**VH0671X**	**VH06MSX**
6.50	5.1	6.3	14.0	1.0	**VH06.5CFX**	**VH06.571X**	**VH06.5MSX**
7.00	5.6	6.8	15.5	1.3	**VH07CFX**	**VH0771X**	**VH07MSX**
8.00	6.6	7.8	15.5	1.6	**VH08CFX**	**VH0871X**	**VH08MSX**
9.00	7.6	8.8	15.5	1.8	**VH09CFX**	**VH0971X**	**VH09MSX**
10.00	8.6	9.8	15.5	2.1	**VH10CFX**	**VH1071X**	**VH10MSX**
10.05	8.6	9.8	15.5	2.1	**VH10.05CFX**	**VH10.0571X**	**VH10.05MSX**
10.50	9.1	10.3	15.5	2.3	**VH10.5CFX**	**VH10.571X**	**VH10.5MSX**
11.00	9.6	10.8	15.5	2.6	**VH11CFX**	**VH1171X**	**VH11MSX**
12.00	10.2	11.8	17.0	3.7	**VH12CFX**	**VH1271X**	**VH12MSX**
12.95	11.2	12.8	17.0	3.9	**VH12.95CFX**	**VH12.9571X**	**VH12.95MSX**
13.00	11.2	12.8	17.0	3.9	**VH13CFX**	**VH1371X**	**VH13MSX**
14.00	12.2	13.8	17.0	4.3	**VH14CFX**	**VH1471X**	**VH14MSX**
15.00	13.2	14.8	20.0	5.7	**VH15CFX**	**VH1571X**	**VH15MSX**
16.00	14.2	15.8	20.0	5.8	**VH16.00CFX**	**VH16.0071X**	**VH16.00MSX**
16.20	14.2	15.8	20.0	5.8	**VH16CFX**	**VH1671X**	**VH16MSX**
17.00	15.2	16.8	20.0	6.3	**VH17CFX**	**VH1771X**	**VH17MSX**
18.00	16.2	17.8	20.0	6.3	**VH18CFX**	**VH1871X**	**VH18MSX**
19.00	17.2	18.8	16.0	5.8	**VH19CFX**	**VH1971X**	**VH19MSX**
19.90	18.2	19.8	21.5	7.9	**VH19.90CFX**	**VH19.9071X**	**VH19.90MSX**
20.00	18.2	19.8	21.5	7.9	**VH20CFX**	**VH2071X**	**VH20MSX**
21.00	19.2	20.8	21.5	8.0	**VH21CFX**	**VH2171X**	**VH21MSX**
22.00	20.2	21.8	23.5	9.7	**VH22CFX**	**VH2271X**	**VH22MSX**
23.00	21.2	22.8	23.5	10.6	**VH23CFX**	**VH2371X**	**VH23MSX**
24.00	22.2	23.8	23.5	11.1	**VH24CFX**	**VH2471X**	**VH24MSX**
24.90	23.3	24.8	23.5	10.8	**VH24.90CFX**	**VH24.9071X**	**VH2490MSX**
25.00	23.2	24.8	23.5	10.8	**VH25CFX**	**VH2571X**	**VH25MSX**
26.00	24.2	25.8	23.5	12.7	**VH26CFX**	**VH2671X**	**VH26MSX**
27.00	25.2	26.8	23.5	12.2	**VH27CFX**	**VH2771X**	**VH27MSX**
30.00	27.8	29.8	26.5	18.7	**VH30CFX**	**VH3071X**	**VH30MSX**
31.00	28.8	30.8	26.5	20.7	**VH31CFX**	**VH3171X**	**VH31MSX**
32.00	29.8	31.8	26.5	19.2	**VH32CFX**	**VH3271X**	**VH32MSX**
32.10	29.8	31.8	26.5	19.2	**VH32.10CFX**	**VH32.1071X**	**VH32.10MSX**
33.00	30.8	32.8	26.5	19.9	**VH33CFX**	**VH3371X**	**VH33MSX**
34.00	31.8	33.8	26.5	26.5	**VH34CFX**	**VH3471X**	**VH34MSX**
37.80	35.8	37.7	31.0	19.5	**VH37.8CFX**	**VH37.871X**	**VH37.8MSX**
38.00	35.8	37.8	21.0	19.7	**VH38CFX**	**VH3871X**	**VH38MSX**
39.00	36.8	38.8	21.0	19.5	**VH39CFX**	**VH3971X**	**VH39MSX**

NOVA-CZ

E Tube/hose insert

for plastic tubing

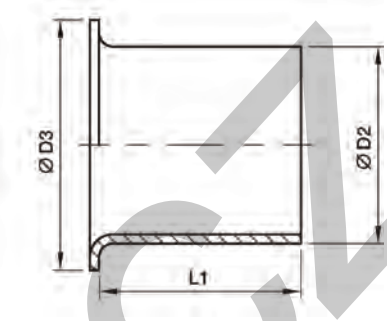

Tube O.D.	Tube I.D.	D2	D3	L1	Weight g/1 piece	Order code Brass
04	2.0	2.0	3.5	8	1	**E04/02X**
04	2.5	2.5	4.0	8	1	**E04/2.5X**
05	3.0	3.0	5.0	14	1	**E0506/03X**
06	3.0	3.0	5.0	14	1	**E0506/03X**
05	4.0	4.0	5.0	14	1	**E0506/04X**
06	4.0	4.0	5.0	14	1	**E0506/04X**
08	4.0	4.0	6.6	14	1	**E08/04X**
06	5.0	5.0	6.0	14	1	**E06/05X**
08	5.0	5.0	6.0	14	1	**E08/05X**
10	6.0	6.0	8.0	15	1	**E0810/06X**
08	6.0	6.0	8.0	15	1	**E0810/06X**
10	8.0	8.0	10.0	15	1	**E10/08X**
12	8.0	8.0	12.0	15	2	**E12/08X**
12	9.0	9.0	12.0	15	2	**E12/09X**
12	10.0	10.0	12.0	15	2	**E1215/10X**
15	12.0	12.0	14.8	15	3	**E15/12X**
15	12.5	12.5	14.8	15	3	**E1516/12.5X**
16	12.5	12.5	14.8	15	3	**E1516/12.5X**
18	14.0	14.0	17.8	15	4	**E18/14X**
18	16.0	16.0	17.8	20	4	**E1820/16X**
20	16.0	16.0	17.8	20	4	**E1820/16X**
22	18.0	18.0	21.8	16	5	**E22/18X**

KOVAZ.CZ

DOZ EO-2 Soft sealing ring

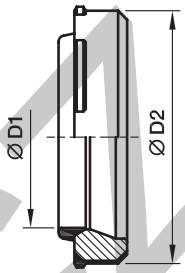

Assembly direction:
Sealing lip shows to the tube end

Series	D1	D2	Weight g/1 piece	Order code Steel NBR	Steel FKM	Stainless Steel FKM	Stainless Steel NBR
LL[2])	04	6.8	1	**DOZ04LL**	–	–	–
	06	8.8	1	**DOZ06LL**	–	–	–
L[3])	06	10.3	1	**DOZ06L**	**DOZ06LVIT**	**DOZ06L71**	**DOZ06LNBR71**
	08	12.3	1	**DOZ08L**	**DOZ08LVIT**	**DOZ08L71**	**DOZ08LNBR71**
	10	14.3	2	**DOZ10L**	**DOZ10LVIT**	**DOZ10L71**	**DOZ10LNBR71**
	12	16.3	2	**DOZ12L**	**DOZ12LVIT**	**DOZ12L71**	**DOZ12LNBR71**
	15	20.3	3	**DOZ15L**	**DOZ15LVIT**	**DOZ15L71**	**DOZ15LNBR71**
	18	24.3	5	**DOZ18L**	**DOZ18LVIT**	**DOZ18L71**	**DOZ18LNBR71**
	22	27.7	6	**DOZ22L**	**DOZ22LVIT**	**DOZ22L71**	**DOZ22LNBR71**
	28	33.7	7	**DOZ28L**	**DOZ28LVIT**	**DOZ28L71**	**DOZ28LNBR71**
	35	42.7	14	**DOZ35L**	**DOZ35LVIT**	**DOZ35L71**	**DOZ35LNBR71**
	42	49.7	17	**DOZ42L**	**DOZ42LVIT**	**DOZ42L71**	**DOZ42LNBR71**
S[4])	06	12.3	2	**DOZ06S**	**DOZ06SVIT**	**DOZ06S71**	**DOZ06SNBR71**
	08	14.3	2	**DOZ08S**	**DOZ08SVIT**	**DOZ08S71**	**DOZ08SNBR71**
	10	16.3	3	**DOZ10S**	**DOZ10SVIT**	**DOZ10S71**	**DOZ10SNBR71**
	12	18.3	4	**DOZ12S**	**DOZ12SVIT**	**DOZ12S71**	**DOZ12SNBR71**
	16	22.3	5	**DOZ16S**	**DOZ16SVIT**	**DOZ16S71**	**DOZ16SNBR71**
	20	27.7	9	**DOZ20S**	**DOZ20SVIT**	**DOZ20S71**	**DOZ20SNBR71**
	25	33.7	13	**DOZ25S**	**DOZ25SVIT**	**DOZ25S71**	**DOZ25SNBR71**
	30	39.7	18	**DOZ30S**	**DOZ30SVIT**	**DOZ30S71**	**DOZ30SNBR71**
	38	49.7	27	**DOZ38S**	**DOZ38SVIT**	**DOZ38S71**	**DOZ38SNBR71**

[2]) LL = very light series; [3]) L = light series; [4]) S = heavy series

KOVAZ.CZ

ED Eolastic soft seal (for BSPP and metric parallel threads)

For Type: GE…ED, EGE…ED, EVGE…ED, EW…ED, EV…ED, ET…ED, EL…ED, VSTI…ED,RI…ED

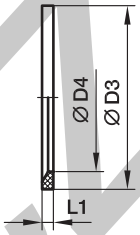

Male stud metric thread T1	Male stud BSP thread T1	D3	D4	L1	Weight g/1 piece	Order code NBR	Order code FKM
M 08×1.0		9.9	6.5	1.0	0.1	**ED8X1X**	**ED8X1VITX**
M 10×1.0	G 1/8 A	11.9	8.4	1.0	0.1	**ED10X1X**	**ED10X1VITX**
M 12×1.5		14.4	9.8	1.5	0.2	**ED12X1.5X**	**ED12X1.5VITX**
M 14×1.5	G 1/4 A	16.5	11.6	1.5	0.2	**ED14X1.5X**	**ED14X1.5VITX**
M 16×1.5		18.9	13.8	1.5	0.1	**ED16X1.5X**	**ED16X1.5VITX**
	G 3/8 A	18.9	14.7	1.5	0.2	**ED3/8X**	**ED3/8VITX**
M 18×1.5		20.9	15.7	1.5	0.1	**ED18X1.5X**	**ED18X1.5VITX**
M 20×1.5		22.9	17.8	1.5	0.2	**ED20X1.5X**	**ED20X1.5VITX**
	G 1/2 A	23.9	18.5	1.5	0.3	**ED1/2X**	**ED1/2VITX**
M 22×1.5		24.3	19.6	1.5	0.2	**ED22X1.5X**	**ED22X1.5VITX**
M 26×1.5	G 3/4 A	29.2	23.9	1.5	0.4	**ED26X1.5X**	**ED26X1.5VITX**
M 27×2.0	G 3/4 A	29.2	23.9	1.5	0.4	**ED26X1.5X**	**ED26X1.5VITX**
M 33×2.0	G 1 A	35.7	29.7	2.0	0.7	**ED33X2X**	**ED33X2VITX**
M 42×2.0	G 1 1/4 A	45.8	38.8	2.0	0.9	**ED42X2X**	**ED42X2VITX**
M 48×2.0	G 1 1/2 A	50.7	44.7	2.0	1.0	**ED48X2X**	**ED48X2VITX**

KOVA.cz

OR O-Ring for fittings with EO 24° DKO swivel

For Type:
DA, EGE, EGEO, MAVE, EW, EV, ET, EL, RED, GZ, GZR, VKA, VKAM

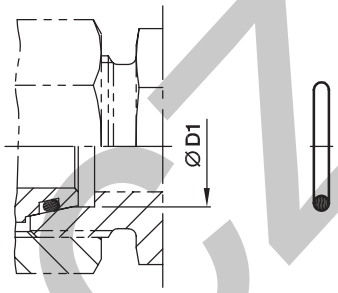

Series	D1	O-ring NBR Shore-hardness approx. 90	O-ring FKM Shore-hardness approx. 90
L[3])	6	**OR4.5X1.5X**	**OR4.5X1.5VITX**
	8	**OR6.5X1.5X**	**OR6.5X1.5VITX**
	10	**OR8.5X1.5X**	**OR8X1.5VITX**
	12	**OR10.5X1.5X**	**OR10X1.5VITX**
	15	**OR12.5X2X**	**OR12X2VITX**
	18	**OR16X2X**	**OR15X2VITX**
	22	**OR20X2X**	**OR20X2VITX**
	28	**OR26X2X**	**OR26X2VITX**
	35	**OR32X2.5X**	**OR32X2.5VITX**
	42	**OR39X2.5X**	**OR38X2.5VITX**
S[4])	6	**OR4.5X1.5X**	**OR4.5X1.5VITX**
	8	**OR6.5X1.5X**	**OR6.5X1.5VITX**
	10	**OR8.5X1.5X**	**OR8X1.5VITX**
	12	**OR10.5X1.5X**	**OR10X1.5VITX**
	16	**OR14X2X**	**OR13X2VITX**
	20	**OR17X2.5X**	**OR16.3X2.4VITX**
	25	**OR22X2.5X**	**OR20.3X2.4VITX**
	30	**OR27X2.5X**	**OR25.3X2.4VITX**
	38	**OR35X2.5X**	**OR33.3X2.4VITX**

[3]) L = light series; [4]) S = heavy series

KOVAZ.CZ

OR O-rings for male stud ends

Male metric thread – O-ring (ISO 6149)
Male UN/UNF thread – O-ring (ISO 11926)

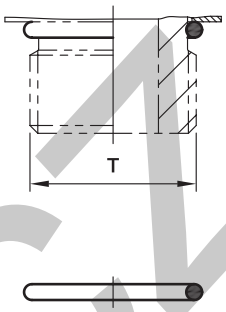

Types with metric thread:
VSTI-OR, GEO, EGEO

Thread T	O-ring NBR	O-ring FKM
M 08×1.0	**OR6.1X1.6**	**OR6.1X1.6VITX**
M 10×1.0	**OR8.1X1.6**	**OR8.1X1.6VITX**
M 12×1.5	**OR9.3X2.2**	**OR9.3X2.2VITX**
M 14×1.5	**OR11.3X2.2**	**OR11.3X2.2VITX**
M 16×1.5	**OR13.3X2.2**	**OR13.3X2.2VITX**
M 18×1.5	**OR15.3X2.2**	**OR15.3X2.2VITX**
M 22×1.5	**OR19.3X2.2**	**OR19.3X2.2VITX**
M 27×2.0	**OR23.6X2.9**	**OR23.6X2.9VITX**
M 33×2.0	**OR29.6X2.9**	**OR29.6X2.9VITX**
M 42×2.0	**OR38.6X2.9**	**OR38.6X2.9VITX**
M 48×2.0	**OR44.6X2.9**	**OR44.6X2.9VITX**

Types with UN/UNF thread:
GE-UNF

Thread T	O-ring NBR	O-ring FKM
7/16-20 UNF	**OR8.92X1.83**	**OR8.92X1.83VITX**
9/16-18 UNF	**OR11.89X1.98**	**OR11.89X1.98VITX**
3/4-16 UNF	**OR16.36X2.21**	**OR16.36X2.21VITX**
7/8-14 UNF	**OR19.18X2.46**	**OR19X2.5VITX**
1 1/16-12 UN	**OR23.47X2.95**	**OR23.47X2.95VITX**
1 5/16-12 UN	**OR29.74X2.95**	**OR29.74X2.95VITX**
1 5/8-12 UN	**OR37.46X3**	**OR37.46X3VITX**
1 7/8-12 UN	**OR43.69X3**	**OR43.69X3VITX**

OR O-rings and retaining rings for male stud ends

Adjustable BSPP thread – O-ring + retaining ring (ISO 1179)

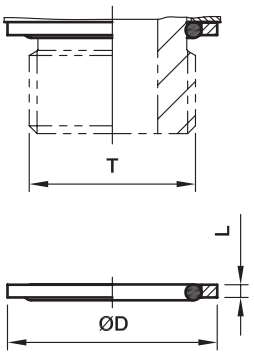

Types with BSPP thread: WEE-R

Thread T	Steel O-ring NBR	Steel D	Steel L	Steel Order code Retaining ring Steel	Stainless Steel O-ring FKM	Stainless Steel D	Stainless Steel L	Stainless Steel Order code Retaining ring Stainless Steel
G 1/8 A	**OR8X1.88X**	14.8	1.4	**RRS1/8CF**	**same like steel**	15.0	1.4	**8207SS1/8**
G 1/4 A	**OR10.77X2.62X**	19.8	1.9	**RRS1/4CF**	**OR10.77X2.62VITX**	19.5	1.9	**8207SS1/4A**
G 3/8 A	**OR13.94X2.62X**	22.8	2.0	**RRS3/8CF**	**same like steel**	23.5	1.9	**8207SS3/8A**
G 1/2 A	**OR18X3.15X**	27.8	2.6	**RRS1/2CF**	**OR17.96X2.62VITX**	28.5	1.9	**8207SS1/2**
G 3/4 A	**OR23X3X**	32.8	2.5	**RRS3/4CF**	**OR23.47X2.62VITX**	34.5	1.9	**8207SS3/4**
G 1 A	**OR29.74X3.53X**	40.8	2.5	**RRS1CF**	**same like steel**	43.5	2.6	**8207SS1A**
G 1 1/4 A	**OR37.69X3.53X**	50.8	2.6	**RRS11/4CF**	**same like steel**	52.5	2.6	**8207SS11/4**
G 1 1/2 A	**OR44.04X3.53X**	55.8	2.6	**RRS11/2CF**	**same like steel**	60.0	2.6	**8207SS11/2**

Order code suffixes	
Material	Example
NBR	OR10.77X2.62X
FKM	OR10.77X2.62VITX

KOVA-CZ

OR O-Rings and Cube-Seals for banjo fittings WHK

For WHK	O-ring NBR	Cube-Seal NBR	O-ring FKM	Cube-Seal FKM
06LM	**OR8.5X1.5X**	**CS9.2X1.1X**	**OR8.5X1.5VITX**	**CS9.2X1.1VITX**
08LM	**OR12.5X1.5X**	**CS10.82X1.68X**	**OR12.5X1.5VITX**	**CS10.82X1.68VITX**
10LM	**OR12.5X1.5X**	**CS12.42X1.68X**	**OR12.5X1.5VITX**	**CS12.42X1.68VITX**
12LM	**OR15.6X1.78X**	**CS15.6X1.68X**	**OR15.6X1.78VITX**	**CS15.6X1.68VITX**
15LM	**OR17.17X1.78X**	**CS17.17X1.68X**	**OR17.17X1.78VITX**	**CS17.17X1.68VITX**
18LM	**OR18.72X2.62X**	**CS20.35X1.68X**	**OR18.72X2.62VITX**	**CS20.35X1.68VITX**
22LM	**OR23.47X2.62X**	**CS25.62X1.68X**		
28LM	**OR31.42X2.62X**	**CS32X1.68X**		
42LM	**OR44.04X3.53X**	**CS47.35X1.68X**		
04LLR	**OR8.5X1.5X**	**CS9.2X1.1X**		
06LLR	**OR8.5X1.5X**	**CS9.2X1.1X**		
08LLR	**OR8.5X1.5X**	**CS9.2X1.1X**		
06LR	**OR8.5X1.5X**	**CS9.2X1.1X**	**OR8.5X1.5VITX**	**CS9.2X1.1VITX**
08LR	**OR12.5X1.5X**	**CS12.42X1.68X**	**OR12.5X1.5VITX**	**CS12.42X1.68VITX**
10LR	**OR12.5X1.5X**	**CS12.42X1.68X**	**OR12.5X1.5VITX**	**CS12.42X1.68VITX**
12LR	**OR14X1.78X**	**CS15.6X1.68X**	**OR14X1.78VITX**	**CS15.6X1.68VITX**
15LR	**OR18.72X2.62X**	**CS20.35X1.68X**	**OR18.72X2.62VITX**	**CS20.35X1.68VITX**
18LR	**OR18.72X2.62X**	**CS20.35X1.68X**	**OR18.72X2.62VITX**	**CS20.35X1.68VITX**
22LR	**OR23.47X2.62X**	**CS25.62X1.68X**	**OR23.47X2.62VITX**	**CS25.62X1.68VITX**
28LR	**CS25.62X1.68X**	**CS32X1.68X**	**OR31.42X2.62VITX**	**CS32X1.68VITX**
35LR	**OR37.69X3.53X**	**CS41X1.68X**	**OR37.69X3.53VITX**	**CS41X1.68VITX**
42LR	**OR44.04X3.53X**	**CS47.35X1.68X**		
06SM	**OR12.5X1.5X**	**CS10.82X1.68X**		
08SM			**OR12.5X1.5VITX**	**CS12.42X1.68VITX**
10SM	**OR15.6X1.78X**	**CS15.6X1.68X**		
12SM	**OR17.17X1.78X**	**CS17.17X1.68X**		
16SM	**OR18.72X2.62X**	**CS20.35X1.68X**		
25SM	**OR31.42X2.62X**	**CS32X1.68X**	**OR31.42X2.62VITX**	**CS32X1.68VITX**
30SM	**OR37.69X3.53X**	**CS41X1.68X**		
38SM	**OR44.04X3.53X**	**CS47.35X1.68X**		
06SR	**OR12.5X1.5X**	**CS12.42X1.68X**		
08SR	**OR12.5X1.5X**	**CS12.42X1.68X**	**OR12.5X1.5VITX**	**CS12.42X1.68VITX**
10SR	**OR14X1.78X**	**CS15.6X1.68X**		
12SR	**OR14X1.78X**	**CS15.6X1.68X**	**OR14X1.78VITX**	**CS15.6X1.68VITX**
16SR	**OR18.72X2.62X**	**CS20.35X1.68X**	**OR18.72X2.62VITX**	**CS20.35X1.68VITX**
20SR	**OR23.47X2.62X**	**CS25.62X1.68X**	**OR23.47X2.62VITX**	**CS25.62X1.68VITX**
25SR	**OR31.42X2.62X**	**CS32X1.68X**	**OR31.42X2.62VITX**	**CS32X1.68VITX**
30SR	**OR37.69X3.53X**	**CS41X1.68X**		
38SR	**OR44.04X3.53X**	**CS47.35X1.68X**		

KOVAZ.CZ

OR O-Rings for banjo fittings WH (71)/TH

For WH/TH	For WH/TH	O-ring NBR	O-ring FKM
06LM/LR		**OR9.3X1.5X**	**OR9.3X1.5VITX**
08LM/LR	06SM/SR	**OR12.5X1.5X**	**OR12.5X1.5VITX**
10LM/LR	08SM/SR	**OR12.5X1.5X**	**OR12.5X1.5VITX**
12LM/LR	10SM/SR	**OR16X1.5X**	**OR16X1.5VITX**
	12SR	**OR16X1.5X**	**OR16X1.5VITX**
15LM	12SM	**OR18X1.5X**	**OR18X1.5VITX**
15LR		**OR20X1.5X**	**OR20X1.5VITX**
18LM/LR	16SM/SR	**OR20X1.5X**	**OR20X1.5VITX**
22LM/LR	20SM/SR	**OR25X2X**	**OR25X2VITX**
28LM/LR	25SM/SR	**OR33X2.5X**	**OR33X2.5VITX**
35LM/LR	30SM/SR	**OR41X2.5X**	**OR41X2.5VITX**
42LM/LR	38SM/SR	**OR46X3X**	**OR46X3VITX**

DKI Sealing ring for pressure gauge connectors

Female thread	D1	D2	L1	Weight g/1 piece	Order code Steel	Order code Stainless Steel 71
G 1/4	6	11.3	4.5	2.5	**DKI1/4CFX**	**DKI1/471X**
G 1/2	12	18.5	5.0	5.0	**DKI1/2CFX**	**DKI1/271X**

KD Soft sealing ring for banjo fittings WH/TH from stainless steel

for wide spot faces of ports

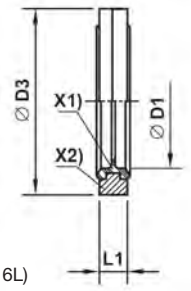

X1) Vulcanized FKM Seal
X2) Supporting-ring (Stainless Steel 316L)

Metric thread parallel	BSPP thread parallel	D1	D3	L1	Weight g/1 piece	Order code Stainless steel FKM
M 10×1.0	G 1/8 A	10.3	17.0	2.5	3	**KD10-1/8SS**
M 12×1.5		12.3	22.0	3.0	5	**KD12SS**
M 14×1.5	G 1/4 A	14.3	22.0	3.0	5	**KD14-1/4SS**
M 16×1.5	G 3/8 A	17.0	27.0	3.0	6	**KD16-3/8SS**
M 18×1.5		18.3	29.0	3.0	8	**KD18SS**
M 22×1.5	G 1/2 A	22.3	32.0	4.5	12	**KD22-1/2SS**
M 26×1.5		26.3	41.0	3.5	18	**KD26SS**
M 27×2.0	G 3/4 A	27.3	41.0	3.5	19	**KD27-3/4SS**
M 33×2.0	G 1 A	33.6	46.0	3.5	18	**KD33-1SS**
M 42×2.0	G 1 1/4 A	42.4	57.0	3.5	26	**KD42-11/4SS**
M 48×2.0	G 1 1/2 A	48.4	64.0	3.5	35	**KD48-11/2SS**

KOVAZ.CZ

DKA Sealing ring

for banjo fittings WH (71)/TH (71)

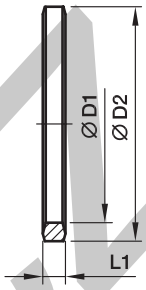

BSPP thread	D1	D2	L1	Weight g/1 piece	Stainless Steel 71
G 1/8 A	9.8	14	2.5	1	**DKA1/871X**
G 1/4 A	13.3	18	3.0	3	**DKA1/471X**
G 3/8 A	16.8	22	3.0	3	**DKA3/871X**
G 1/2 A	21.1	26	4.5	6	**DKA1/2X4.571X**
G 3/4 A	26.6	32	3.5	6	**DKA3/471X**
G 1 A	33.4	39	3.5	8	**DKA171X**
G 1 1/4 A	42.1	49	3.5	12	**DKA11/471X**
G 1 1/2 A	48.1	55	3.5	15	**DKA11/271X**

Male stud metric thread	D1	D2	L1	Weight g/1 piece	Stainless Steel 71
M 08×1.0	8.1	12	2.5	1	
M 10×1.0	10.1	14	3.0	1	**DKA1071X**
M 12×1.5	12.1	17	3.0	2	**DKA1271X**
M 14×1.5	14.1	19	3.0	3	**DKA1471X**
M 16×1.5	16.1	21	3.0	3	**DKA1671X**
M 18×1.5	18.1	23	3.0	3	**DKA1871X**
M 20×1.5	20.1	25	3.0	4	**DKA2071X**
M 22×1.5	22.1	27	4.5	6	**DKA22X4.571X**
M 26×1.5	26.1	31	3.5	6	**DKA26X3.571X**
M 27×2.0	27.1	32	3.5	6	**DKA2771X**
M 33×2.0	33.1	39	3.5	8	**DKA3371X**
M 42×2.0	42.1	49	3.5	12	**DKA11/471X**
M 48×2.0	48.1	55	3.5	15	**DKA11/271X**

KOVAZ.cz

For your notes

KOVAZ.CZ
Dry Technology