Pneumatic Seals

aerospace
climate control
electromechanical
filtration
fluid & gas handling
hydraulics
pneumatics
process control
sealing & shielding

Parker Prädifa

ENGINEERING YOUR SUCCESS.

KOVAZ.cz

Parker-Prädifa Pneumatic Seals are the result of many years of compound and profile development experience, allowing the pneumatics engineer to pursue new design options and techniques such as selecting a friction-optimised sealing lip geometry which preserves the lubricating film.

A comprehensive portfolio of sealing systems for pneumatic cylinders is available to the application engineer: rod seals and wipers, single- and double-acting piston seals, complete pistons with or without mechanical dampers, cushioning rings as well as combined seal/wiper rings for ISO and short-stroke cylinders.
For special application requirements, as well, Parker offers a wide product range (partially included in this catalogue): seal/wiper elements for non-rotating cylinders, oval double-acting piston seals for flat cylinders, fleece-rubber seals for rodless cylinders and special seal/wiper elements for particularly dirty operating conditions.

In addition, Parker draws on years of experience in the field of valve sealing systems – particularly spool valves – thus being able to design the seal best suiting the customer's specific valve system and associated requirements.

Special compounds are available for pneumatic sealing solutions, combining the benefits of low friction, minimum wear and long service life. The variety of our compound range offers the right choice of material for any application and engineering requirement.

The Parker Seal Group´s extensive range of supporting facilities and expertise, including an accredited test lab, rubber and polyurethane compound development, physical lab and finite elements analysis, provides a solid base for customer-specific product developments.

For any requirements regarding the above, please contact our application engineers, who will be happy to assist you.

KOVAZ.

Warning - user responsibility

This document and other information from Parker Hannifin Corporation, its subsidiaries and authorized distributors provide product or system options for further investigation by users having technical expertise.

The user, through its own analysis and testing, is solely responsible for making the final selection of the system and components and assuring that all performance, endurance, maintenance, safety and warning requirements of the application are met. The user must analyze all aspects of the application, follow applicable industry standards, and follow the information concerning the product in the current product catalogue and in any materials provided from Parker or its subsidiaries or authorized distributors.
To the extent that Parker or its subsidiaries or authorized distributors provide component or system options based upon data or specifications provided by the user, the user is responsible for determining that such data and specifications are suitable and sufficient for all applications and responsibly foreseeable uses of the components or systems.

Range of application

Our seals may only be used within the application parameters stated in our documents as regards compatibility with contact media, pressures, temperatures and time of storage. Application or use outside of the specified application parameters as well as the selection of different compounds by mistake may result in damage to life, the environment and/or equipment and facilities.

The information contained in our publications is based on know-how developed over decades of experience in the manufacturing and application of seals. Despite this experience, unknown factors arising out of the practical application of seals may considerably affect the overall applicability of this information in such a way that the recommendations provided herein are not to be considered generally binding.

The data for working pressure, working temperature, and surface speed stated in the columns represent maximum values and are interrelated. Under extreme working conditions it is recommended not to use all maximum values simultaneously.

For special requirements (pressure, temperature, speed, etc.) please contact our Consultancy Service, so that suitable materials and/or designs can be recommended.

Compatibility of seals and operating media / cleaning agents

Due to the great diversity of operational parameters affecting fluidic devices and their impact on seals, it is absolutely imperative that manufacturers of these devices approve seals for functional and operational suitability under field conditions.

Furthermore, in view of the consistent increase of newly available media used as hydraulic oils, lubricants, and cleaning agents, special attention is invited to the aspect of compatibility with sealing elastomers currently in use.

Additives contained in base media in order to enhance certain functional characteristics may affect compatibility characteristics of sealing materials.

For this reason, it is imperative that any product equipped with our seals be tested for compatibility with operational media or cleaning agents approved or specified by you either at your plant or by means of field tests prior to any serial application.

We kindly ask you to comply with this notice since, as a manufacturer of seals, we are not in a position, as a matter of principle, to perform simulations regarding any and all conditions present in the final application nor of knowing the composition of the operational media and cleaning agents used.

Design modifications

We reserve the right to make design modifications without prior notification.

Prototypes and samples

Prototypes and samples are produced from experimental moulds. The subsequent series production may differ in production techniques from the prototype production unless specific agreement to the contrary was reached beforehand.

Delivery and services

The delivery guarantee (availability of moulds) for individual dimensions of our range of products is limited to a period of 7 years.

Damaged moulds, including standard items, can only be replaced in case of sufficient demand. Most of the dimensions stated in this catalogue are normally (but not as a matter of course) available ex stock.

For the production of smaller quantities, special compounds, and in case of special production procedures, we reserve the right of charging a prorated share of set-up costs.

All deliveries and services are subject to our terms.

Quality systems

Our manufacturing sites are certified according to ISO 9001 resp. ISO/TS 16949.

Copyright

All rights reserved by Parker Hannifin Corporation. Extracts may only be taken with permission. Modification rights reserved.

Validity

This edition supersedes all prior documents.

KOVAZ.cz

Contents	
General information	**6**
Compounds	6
General installation guidelines for piston seals	16
General installation guidelines for rod seals	19
Maximum gap allowance	21
Rod seals	**25**
Rod seals	26
Rod seals with wiper	35
Rod seals with wiper for anti-rotation pneumatic cylinders	47
Rod seals with wiper and guiding element	51
Piston seals	**53**
Piston seals, single-acting	54
Piston seals, double-acting	69
Complete pistons, single-acting	76
Complete pistons, double-acting	80
Other seal products	**87**
Wipers	88
Cushioning seals	90
Guiding elements	95
O-rings	100

KOVA

Sealing compounds for fluid technology

Compound Code	Elastomer base	Shore Hardness[1]	Colour	Temperature range[2] (°C) min.	max.	short	T-Onset (°C)	TR 10 (°C)	Media compatibility: Mineral oil	Poly-α-Olefin	HEPR	HEPG	HETG	HEES	DOT-3 / -4	HFAE, HFAS, HFB	HFC
Rubber – not resistant to mineral oil																	
E8536	EPDM	70A ±5	black	-50	+150	170	< -45					•			•		
E8617	EPDM	70A ±5	black	-50	+150	170	< -40					•			•		
E8790	EPDM	70A ±5	black	-50	+150	170	< -40					•			•		
E3676	EPDM	75A ±5	black	-50	+150	200	< -45					•			•		
E9135	EPDM	80A ±5	black	-50	+150	200	< -45					•			•		
Rubber – resistant to mineral oil																	
V3656	FKM	70A ±5	black	-20	+200	230	< -9		•	•	•		•	•		•		
V8606	FKM	70A ±5	green	-25	+200	230	< -20		•	•	•		•	•		•		
V9153	FKM	70A ±5	green	-30	+200	230	< -28		•	•	•	•	•	•		•	•	
V0747	FKM	75A ±5	green	-20	+200	230	< -10		•	•	•		•	•		•		
V8550	FKM	80A ±5	black	-25	+200	230	< -20		•	•	•		•	•		•		
V3638	FKM	80A ±5	green	-20	+200	230	< -10		•	•	•		•	•		•		
V3681	FKM	80A ±5	black	-20	+200	230	< -10		•	•	•		•	•		•		
V3841	FKM	80A ±5	green	-20	+200	230	< -10		•	•	•		•	•		•		
V3664	FKM	85A ±5	green	-20	+200	230	< -8		•	•	•		•	•		•		
V9145	FKM	85A ±5	green	-40	+200	230	< -38		•	•	•	•	•	•		•	•	
V9154	FKM	85A ±5	black	-20	+200	230	< -10		•	•	•		•	•		•		
V3839	FKM	90A ±5	black	-20	+200	230	< -8		•	•	•		•	•		•		
N3560	NBR	60A ±5	green	-40	+100	120	< -35		•	•	•	•	•	•		•	•	
N3567	NBR	70A ±5	black	-20	+100	120	< -16		•	•	•	•	•			•	•	
N0674	NBR	70A ±5	black	-30	+100	120	< -22		•	•	•	•	•	•		•	•	
N3571	NBR	70A ±5	black	-35	+100	120	< -25		•	•	•	•	•	•		•	•	
N8612	NBR	70A ±5	black	-35	+100	120	< -33		•	•	•	•	•	•				
N3854	NBR	70A ±5	black	-30	+100	120	< -19		•	•	•	•	•	•		•	•	

For specific requirements, special compounds are available. Please contact our Consultancy Service.

1) Hardness values are average values, measured on standard specimen of 6 mm thickness acc. to DIN 53505. On finished parts, only micro hardness (IRHD-M) can typically be measured, which leads to different results.

2) The minus temperatures are provided as a general guideline only because functionality at low temperatures depends on seal design, operating conditions and the condition of adjoining metal parts. The plus temperatures stated depend on the application. They may be exceeded but will reduce service life accordingly. Short-term operation without loads, e.g. during painting processes, above the temperature limit is permissible. Long-term operation above the temperature limit will reduce service life. The use of aggressive media intensifies the degradation process.

Sealing compounds for fluid technology

						Application									Standards	Remarks
	HFD	Water	Compressed air	Acids	Lyes	Hydraulics	Pneumatics	Automotive	Industrial	Mining	Oil and Gas	Gas	Food, CPI	Drinking water		
		•	•	•	•				•				•	•		
		•	•	•	•			•					•	•		high tear resistance high tensile strength low compression set
		•	•	•	•				•				•	•	KTW, WRAS, W 270, EN 681-1 and W 534, KIWA, NFS 61 and ACS	standard for drinking water applications
		•	•	•	•			•	•				•	•		
		•	•	•	•			•					•	•	TL VW 52211	high tear resistance high tensile strength
	•		•	•		•	•	•	•	•	•	•				
	•		•	•		•	•	•	•	•	•	•				
	•	•	•	•				•		•	•	•				
	•		•	•		•	•	•	•	•	•	•				o-ring compound (mainly for slipper seals)
	•		•	•		•	•	•	•	•	•	•				
	•		•	•		•	•	•	•	•	•	•				
	•		•	•		•	•	•	•	•	•	•				
	•		•	•		•	•	•	•	•	•	•				for bonded seals (rubber/ metal, etc.)
	•		•	•		•	•	•	•	•	•	•				improved chemical resistance
	•	•	•	•				•		•	•	•				low-temperature compound
	•		•	•		•		•		•	•	•				wear-resistant for shock absorber applica-tions
	•		•	•		•				•	•	•				for bonded seals (rubber/ metal, etc.)
		•	•		•	•	•			•	•	•				
		•	•		•	•	•	•	•	•	•	•				suitable for sealing plastic parts
		•	•		•	•	•	•	•	•	•	•				o-ring compound (mainly for slipper seals)
		•	•		•	•	•	•	•	•	•	•				
			•		•	•	•	•	•	•	•	•				
		•	•		•	•	•	•	•	•	•	•		•		

Sealing compounds for fluid technology

Compound Code	Elastomer base	Shore Hardness[1]	Colour	Temperature range[2] (°C) min.	max.	short	T-Onset (°C)	TR 10 (°C)	Media compatibility: Mineral oil	Poly-α-Olefin	HEPR	HEPG	HETG	HEES	DOT-3 / -4	HFAE, HFAS, HFB	HFC
Rubber – resistant to mineral oil																	
N8602	NBR	70A ±5	black	-50	+80	100	< -45		•	•	•	•	•			•	•
N8604	NBR	70A ±5	black	-30	+100	120	< -21		•	•	•	•	•	•		•	•
N9150	NBR	70A ±5	black	-35	+120	135	< -25		•	•	•	•	•	•		•	•
N3566	NBR	75A ±5	yellow-brown	-20	+100	120	< -5		•	•	•	•	•	•		•	•
N3578	NBR	75A ±5	black	-30	+100	120	< -23		•	•	•	•	•			•	•
N8605	NBR	75A ±5	black	-30	+100	120	< -23		•	•	•	•	•	•			
N3771	NBR	80A ±5	black	-15	+100	120	< -25		•	•	•	•	•	•		•	•
N3580	NBR	80A ±5	brown	-25	+80	100	< -18		•	•	•	•	•			•	•
N8603	NBR	80A ±5	black	-25	+100	120	< -18		•	•	•	•	•	•			
N8613	NBR	80A ±5	black	-50	+80	100	< -45		•	•	•	•	•	•		•	•
N3584	NBR	85A ±5	black	-25	+100	120	< -20		•	•	•	•	•			•	•
N8614	NBR	85A ±5	black	-25	+100	120	< -20		•	•	•	•	•	•			
N3582	NBR	85A ±5	braun	-10	+80	120	< -2		•	•	•	•	•	•		•	•
N3589	NBR	85A ±5	black	-20	+100	120	< -15		•	•	•	•	•			•	•
N3763	NBR	85A ±5	braun	-25	+100	120	< -20		•	•	•	•	•	•		•	•
N3544	NBR	90A ±5	black	-25	+100	120	< -18		•	•	•	•	•	•		•	•
N3587	NBR	90A ±5	black	-25	+100	120	< -10		•	•	•	•	•			•	•
N3764	NBR	90A ±5	reddish brown	-10	+100	120	< -4		•	•	•	•	•			•	•
N4274	XNBR	80A ±5	black	-15	+100	120	< -18		•	•	•	•	•			•	•
N8615	HNBR/NBM	70A ±5	black	-25	+130	150	< -22		•	•	•	•	•			•	•
N3573	HNBR/NBM	75A ±5	black	-20	+150	170	< -16		•	•	•	•	•			•	•
N3510	HNBR/NBM	85A ±5	black	-20	+150	170	< -18		•	•	•	•	•			•	•
N3512	HNBR/NBM	90A ±5	black	-20	+150	170	< -16		•	•	•	•	•			•	•
N8526	HNBR/NBM	90A ±5	black	-20	+150	170	< -16		•	•	•	•	•			•	•
N8557	HNBR/NBM	75A ±5	black	-35	+130	150	< -35		•	•	•	•	•			•	•
Diaphragm compounds																	
N3770	NBR	55A ±5	black	-25	+100	120	< -20		•	•	•	•	•			•	•
N3866	NBR	55A ±5	black	-10	+100	120	< -4		•	•	•	•	•			•	•

For specific requirements, special compounds are available. Please contact our Consultancy Service.

1) Hardness values are average values, measured on standard specimen of 6 mm thickness acc. to DIN 53505. On finished parts, only micro hardness (IRHD-M) can typically be measured, which leads to different results.

2) The minus temperatures are provided as a general guideline only because functionality at low temperatures depends on seal design, operating conditions and the condition of adjoining metal parts. The plus temperatures stated depend on the application. They may be exceeded but will reduce service life accordingly. Short-term operation without loads, e.g. during painting processes, above the temperature limit is permissible. Long-term operation above the temperature limit will reduce service life. The use of aggressive media intensifies the degradation process.

Sealing compounds for fluid technology

		Application												Standards	Remarks
HFD	Water	Compressed air	Acids	Lyes	Hydraulics	Pneumatics	Automotive	Industrial	Mining	Oil and Gas	Gas	Food, CPI	Drinking water		
	•	•		•	•	•	•	•	•	•	•			limited ozone resistance acc. to ISO 1431-1, procedure B	good low-temperature resistance
	•	•		•	•	•	•	•	•	•	•			limited ozone resistance acc. to DIN 53509/1	
	•	•		•	•	•	•	•	•	•	•				
	•	•		•	•	•	•	•	•	•	•				
	•	•		•	•	•	•	•	•	•	•				
		•		•	•	•			•	•	•				
	•	•		•	•	•	•	•	•	•	•				heating oils
	•	•		•	•	•	•	•	•	•	•				
	•	•		•	•	•	•	•	•	•	•				
	•	•		•	•	•	•	•	•	•	•			limited ozone resistance acc. to ISO 1431-1, procedure B	good low-temperature resistance air brakes
	•	•		•	•	•	•	•	•	•	•				
		•		•	•	•	•	•	•	•	•				
	•	•		•	•	•	•	•	•	•	•				
	•	•		•	•	•	•	•	•	•	•				suitable for sealing non-ferrous metal and plastic parts
	•	•		•	•	•	•	•	•	•	•				
	•	•		•	•	•	•	•	•	•	•				
	•	•		•	•	•	•	•	•	•	•				only for wipers
	•	•		•	•	•	•	•	•	•	•				
				•	•	•	•	•	•	•	•				outstanding wear resistance
	•	•		•	•	•	•	•	•	•	•				
	•	•		•	•	•	•	•	•	•	•				
	•	•		•	•	•	•	•	•	•	•				
	•	•		•	•	•	•	•	•	•	•				
	•	•		•	•	•	•	•	•	•	•				outstanding wear resistance
	•	•		•	•	•	•	•	•	•	•				central hydraulics media
	•	•		•	•	•	•	•	•	•	•				low gas permeability
	•	•		•	•	•	•	•	•	•	•				very low gas permeability

Sealing compounds for fluid technology

Compound Code	Elastomer base	Shore Hardness[1]	Colour	Temperature range[2] (°C)			T-Onset (°C)	TR 10 (°C)	Media compatibility									
				min.	max.	short			Mineral oil	Poly-α-Olefin	HEPR	HEPG	HETG	HEES	DOT-3 / -4	HFAE, HFAS, HFB	HFC	
Rubber/fabric compounds																		
Q5009	NBR		dark grey	-40	+120				•	•	•	•	•			•	•	
Q5018	NBR		black	-40	+120				•	•	•	•	•			•	•	
Q5019	NBR		black	-40	+120				•	•	•	•	•			•	•	
Q5021	NBR		black	-40	+120				•	•	•	•	•			•	•	
Q5022	NBR		black	-40	+120				•	•	•	•	•			•	•	
Q5023	NBR		brown	-40	+120				•	•	•	•	•			•	•	
Q5024	NBR		brown	-40	+120				•	•	•	•	•			•	•	
Q5054	NBR		black	-40	+120				•	•	•	•	•			•	•	
Q5050	HNBR		black	-40	+135				•	•	•	•	•			•	•	
Polyurethane compounds																		
P5075	TPU	80A ±5	ochre	-45	+80	100		< -56	•	•	•							
P5007	TPU	82A ±5	green, transparent	-35	+80	110		< -40	•	•	•							
P5070	TPU	83A ±5	green	-35	+85	110		< -38	•	•	•		•	•		•		
P5011	TPU	88A ±5	brown	-36	+85	110		< -39	•	•	•		•	•		•		
P5080	TPU	88A ±5	light green	-40	+85	110		< -42	•	•	•		•	•		•		
P5010	TPU	90A ±5	dark red	-30	+100	120		< -35	•	•	•							
P5012	TPU	90A ±5	red	-38	+100	120		< -42	•	•	•		•	•		•		
P4300	TPU	92A ±5	yellow	-30	+110	145		< -35	•	•	•							
P5600	TPU	92A ±5	reddish brown	-20	+80	100						•					•	
P5004	TPU	93A ±5	black	-30	+80	100		< -30	•	•	•							
P5000	TPU	94A ±5	dark green	-20	+100	120		< -20	•	•	•		•	•		•		
P5001	TPU	94A ±5	brown	-35	+100	120		< -35	•	•	•		•	•		•		
P5008	TPU	94A ±5	green	-35	+100	120		< -32	•	•	•							
P5009	TPU	94A ±5	grey	-45	+95	115		< -49	•	•	•							

For specific requirements, special compounds are available. Please contact our Consultancy Service.

1) Hardness values are average values, measured on standard specimen of 6 mm thickness acc. to DIN 53505. On finished parts, only micro hardness (IRHD-M) can typically be measured, which leads to different results.

2) The minus temperatures are provided as a general guideline only because functionality at low temperatures depends on seal design, operating conditions and the condition of adjoining metal parts. The plus temperatures stated depend on the application. They may be exceeded but will reduce service life accordingly. Short-term operation without loads, e.g. during painting processes, above the temperature limit is permissible. Long-term operation above the temperature limit will reduce service life. The use of aggressive media intensifies the degradation process.

Sealing compounds for fluid technology

						Application									Standards	Remarks
	HFD	Water	Compressed air	Acids	Lyes	Hydraulics	Pneumatics	Automotive	Industrial	Mining	Oil and Gas	Gas	Food, CPI	Drinking water		
		•				•			•	•	•					high-pressure cleaners
		•				•			•	•	•					high-pressure cleaners
						•				•	•					
						•				•	•					
						•				•	•					
		•				•			•	•	•					high-pressure cleaners
		•				•			•	•	•					high-pressure cleaners
	•	•				•			•	•	•					high-pressure cleaners small dimensions
		•				•			•	•	•					high-pressure cleaners
			•				•	•	•							outstanding low-temperature behaviour outstanding dynamic behaviour
			•				•									
		•	•				•									
		•	•				•	•	•							friction-optimized very good wear resistance
		•	•			•		•								stick-slip free sliding central hydraulics media
			•			•	•									
		•	•			•	•	•	•							central hydraulics media
			•			•			•	•						excellent high-temperature behaviour excellent dynamic behaviour
	•	•	•	•	•		•		•				•	•		
			•			•										
			•			•	•	•	•	•						
		•	•			•	•	•	•	•					exceeds VDMA Guideline 24568 for high-performance hydraulic oils of water hazard class 0	central hydraulics media
			•			•	•		•	•	•	•				
			•			•				•	•					excellent low-temperature behaviour

Sealing compounds for fluid technology

Compound Code	Elastomer base	Shore Hardness[1]	Colour	Temperature range[2] (°C)			T-Onset (°C)	TR 10 (°C)	Media compatibility									
				min.	max.	short			Mineral oil	Poly-α-Olefin	HEPR	HEPG	HETG	HEES	DOT-3 / -4	HFAE, HFAS, HFB	HFC	
Polyurethane compounds																		
P6000	TPU	95A ±5	charcoal-grey	-35	+110	120		< -30	•	•	•							
P6030	TPU	94A ±5	orange	-35	+105	120		< -32	•	•	•							
P5062	TPU	52D ±5	black	-25	+110	130		< -40	•	•	•							
P6060	TPU	52D ±5	yellow	-35	+110	120		< -32	•	•	•							
Plastic materials																		
W5005	TPE-E	40D ±5	natural	-40	+100	120			•	•	•							
W5035	TPE-E	55D ±5	grey	-40	+100	120			•	•	•							
W5001	POM		natural	-40	+100	120			•	•	•	•	•	•		•	•	
W5019	PA 6.6		black	-40	+120	140			•	•	•	•	•	•	•	•	•	
W5059	PA 6.6		black	-40	+140	160			•	•	•	•	•	•	•	•	•	
W5007	PA 6.6		natural	-40	+110	130			•	•	•	•	•	•	•	•	•	
W5029	PEI		natural	-50	+170	190			•	•								
W5071	PK		green (natural)	-40	+100	120			•	•	•	•	•	•				
O-ring compounds for PTFE slipper seals																		
N0674	NBR	70A ±5	black	-30	+100	120	< -22		•	•	•	•	•	•		•	•	
V0747	FKM	75A ±5	black	-20	+200	230	< -10		•	•	•		•	•		•		
N0304	NBR	75A ±5	black	-50	+110	120	< -40		•	•	•	•	•	•		•	•	
E0540	EPDM	80A ±5	black	-40	+150	170	< -45					•			•			
N3578	NBR	75A ±5	black	-30	+110	120	< -26S		•	•	•	•	•			•	•	
N0552	NBR	90A ±5	black	-30	+100	120	< -15		•	•	•	•	•			•	•	
Polon® compounds																		
Polon® 001	Virgin PTFE		white	-190	+230				•	•	•	•	•	•	•	•	•	
Polon® 003	Virgin TFM		white	-190	+230				•	•	•	•	•	•	•	•	•	

For specific requirements, special compounds are available. Please contact our Consultancy Service.

1) Hardness values are average values, measured on standard specimen of 6 mm thickness acc. to DIN 53505. On finished parts, only micro hardness (IRHD-M) can typically be measured, which leads to different results.

2) The minus temperatures are provided as a general guideline only because functionality at low temperatures depends on seal design, operating conditions and the condition of adjoining metal parts. The plus temperatures stated depend on the application. They may be exceeded but will reduce service life accordingly. Short-term operation without loads, e.g. during painting processes, above the temperature limit is permissible. Long-term operation above the temperature limit will reduce service life. The use of aggressive media intensifies the degradation process.

Sealing compounds for fluid technology

Application														Standards	Remarks
HFD	Water	Compressed air	Acids	Lyes	Hydraulics	Pneumatics	Automotive	Industrial	Mining	Oil and Gas	Gas	Food, CPI	Drinking water		
		•			•				•	•					excellent wear resistance
		•			•			•	•	•	•				high wear resistance
		•			•			•	•	•	•				very good extrusion resistance low friction good hydrolysis resistance
		•			•			•	•	•	•				
		•			•	•									
		•			•	•									
•	•	•			•	•				•	•	•			
	•	•	•	•	•	•	•	•	•	•	•				
	•	•	•	•	•	•	•	•	•	•					
	•	•	•	•	•	•	•	•	•	•					
					•							•			glass-fibre reinforced
					•		•								rotary transmissions
	•	•		•	•	•	•	•	•	•	•				
•		•	•		•	•	•	•	•		•				
	•	•		•	•	•			•		•				
	•	•	•	•			•	•							
	•	•		•	•	•		•	•	•					
	•	•		•	•	•	•	•	•	•	•				
•	•	•	•	•				•				•	•		very good chemical resistance
•	•	•	•	•				•				•			very good chemical resistance high mechanical strength

Pneumatic Seals
Parker Hannifin GmbH
Packing Division Europe

Sealing compounds for fluid technology

Compound Code	Elastomer base	Shore Hardness[1]	Colour	Temperature range[2] (°C)			T-Onset (°C)	TR 10 (°C)	Media compatibility								
				min.	max.	short			Mineral oil	Poly-α-Olefin	HEPR	HEPG	HETG	HEES	DOT-3 / -4	HFAE, HFAS, HFB	HFC
Polon® compounds																	
Polon® 012	Modified PTFE		dark green	-190	+230				•	•	•	•	•	•	•	•	•
Polon® 025	PTFE + 15 % glas fibre		dark green	-190	+290				•	•	•	•	•	•	•	•	•
Polon® 031	PTFE + 15 % carbon		black	-190	+290				•	•	•	•	•	•	•	•	•
Polon® 030	PTFE + 23 % carbon + 2 % graphite		black	-190	+315				•	•	•	•	•	•	•	•	•
Polon® 033	PTFE + 25 % carbon		black	-190	+315				•	•	•	•	•	•	•	•	•
Polon® 044	PTFE + 15 % graphite		black	-190	+230				•	•	•	•	•	•	•	•	•
Polon® 052	PTFE + 40 % bronze		bronze	-156	+260				•	•	•	•	•	•	•	•	•
Polon® 062	PTFE + 60 % bronze		bronze	-156	+260				•	•	•	•	•	•	•	•	•
Polon® 067	PTFE + 10 % ekonol		beige	-260	+320				•	•	•	•	•	•	•	•	•
Polon® 074	PTFE + 10 % carbon fibre		greyish	-260	+310				•	•	•	•	•	•	•	•	•
Polon® 083	TPU	72D ±5	yellow, transparent	-20	+100				•	•	•	•	•	•	•	•	•
Polon® 314	UHMW-PE		white	-200	+80				•	•							•
Polon® 331	PVDF		white/yellow	-30	+140				•	•	•	•	•	•		•	•

For specific requirements, special compounds are available. Please contact our Consultancy Service.

1) Hardness values are average values, measured on standard specimen of 6 mm thickness acc. to DIN 53505. On finished parts, only micro hardness (IRHD-M) can typically be measured, which leads to different results.

2) The minus temperatures are provided as a general guideline only because functionality at low temperatures depends on seal design, operating conditions and the condition of adjoining metal parts. The plus temperatures stated depend on the application. They may be exceeded but will reduce service life accordingly. Short-term operation without loads, e.g. during painting processes, above the temperature limit is permissible. Long-term operation above the temperature limit will reduce service life. The use of aggressive media intensifies the degradation process.

Sealing compounds for fluid technology

Application														Standards	Remarks
HFD	Water	Compressed air	Acids	Lyes	Hydraulics	Pneumatics	Automotive	Industrial	Mining	Oil and Gas	Gas	Food, CPI	Drinking water		
•	•	•	•	•	•		•	•							improved wear resistance
•	•	•	•	•	•			•	•	•					very good chemical resistance very good creep resistance electrical properties like virgin PTFE
•	•	•	•	•		•		•							for medium mechanical loads for hard sealing surfaces water/oil emulsions chemical resistance limited by carbon
•	•	•	•	•		•		•							very good wear resistance very good creep resistance for high mechanical loads for water and oil hydraulics
•	•	•	•	•		•		•							very good wear resistance very good creep resistance
•	•	•	•	•			•	•		•					for low mechanical loads for soft sealing surfaces chemical resistance limited by graphite
•	•	•	•	•	•		•	•	•	•					outstanding wear resistance outstanding creep resistance for high mechanical loads
•	•	•	•	•	•		•	•	•	•					outstanding wear resistance outstanding creep resistance for high mechanical loads
•	•	•	•	•	•		•	•		•					for medium mechanical loads for soft sealing surfaces limited chemical resistance limited usability in hot water
•	•	•	•	•	•	•	•	•							for short strokes with high frequency very good wear resistance in water suitable for sea water
•	•	•	•	•	•	•	•	•				•			very good wear resistance for high mechanical loads
	•				•	•	•		•			•	•		outstanding wear resistance in water and air
	•	•	•	•	•			•	•	•					wear resistance like nylon suitable for steam sterilisation

General installation guidelines for piston seals

International (ISO) and national (DIN) standards for seal housing dimensions are in place and should be considered. For seals requiring a special groove, e.g. special seals, valve seals, rotor seals etc., the groove dimensions are stated separately. In general, the surface finishes, leading edge chamfers and dimensions stated here have already proved themselves and will mostly be found in the standards.

We recommend that customers adhere to the tolerances and surface finishes stated in this catalogue. This is a prerequisite for easy, damage-free installation and for the seal to retain the properties stated in this catalogue.

Surfaces: Grinding as final machining process for dynamic sealing surfaces is not sufficient. These surfaces have to be polished afterwards.

Radii: As for the necessary radii please refer to the respective profile data or the applicable standards.

Solid piston

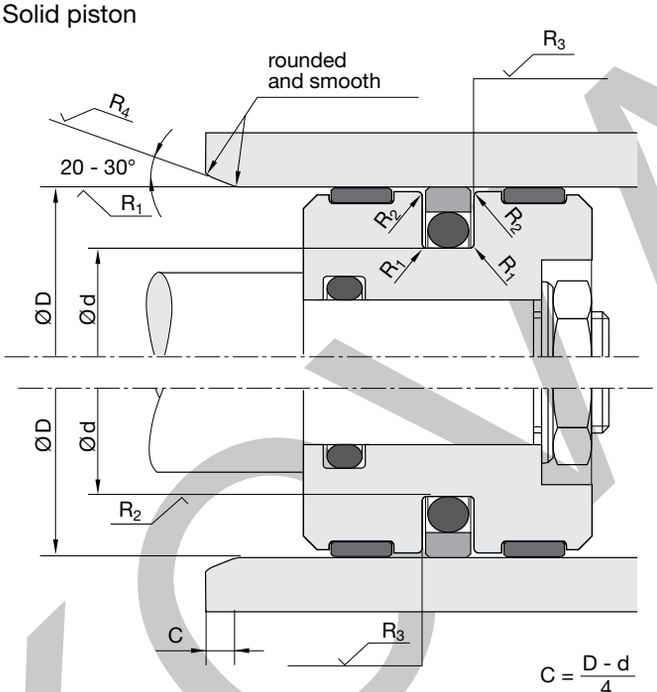

Split piston

Surfaces

Dynamic sealing surfaces
For rubber and PTFE products
R_1: R_z 1.0 µm / R_a 0.2 µm
80 % ≤ $*t_{p1}$ ≤ 95 %

For polyurethane products
R_1: R_z 1.6 µm / R_a 0.4 µm
60 % ≤ $*t_{p1}$ ≤ 80 %

Static sealing surfaces
R_2: R_z 6.3 µm / R_a 0.8 µm
$*t_{p2}$ ≥ 60 %

Non-sealing surfaces and lead-in chamfers
R_3: R_z 16 µm / R_a 4 µm
R_4: R_z 10 µm / R_a 1,6 µm

* Measured in a depth of 25 % of the R_t-value based on a reference level (zero line) set at 5 % bearing area.

Stretchable seals with tight fit

When seals have a tight fit the piston shoulder diameter can be reduced to ease assembly. By adapting this principal, metal to metal contact, caused by the piston contacting the cylinder wall surface under high transverse loads, is avoided.

Radii: As for the necessary radii please refer to the respective profile data or the applicable standards.

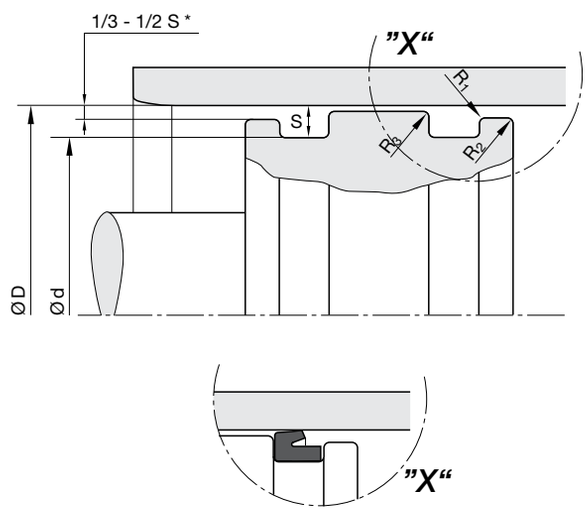

KOVAZ.CZ

Complete pistons

Installation for complete pistons

The Parker DP, DR and DE complete pistons have a sealing bead on one side of the inner diameter for reliable static sealing.
To take advantage of this sealing bead, the stated dimensions must be observed.

Assembly conditions

For the double-acting DP and DR complete pistons the short assembly version (A) may be selected. In this case the complete piston must be pushed onto the end of the piston rod with the sealing bead forwards during assembly.

If a single-acting DE complete piston is used and the application requires the sealing lip to be pointing away from the piston rod assembly version A may be used as well.

If the sealing lip of the DE points towards the piston rod, then the sealing bead must be on the side away from the piston rod and assembly version B is used. To bridge the lead-in chamfer and the thread undercut, a suitable back-up ring must be installed between the nut and the complete piston.

The DK and EK complete pistons have no inner sealing bead and can be installed like DR and DP. The orientation is immaterial in this case.

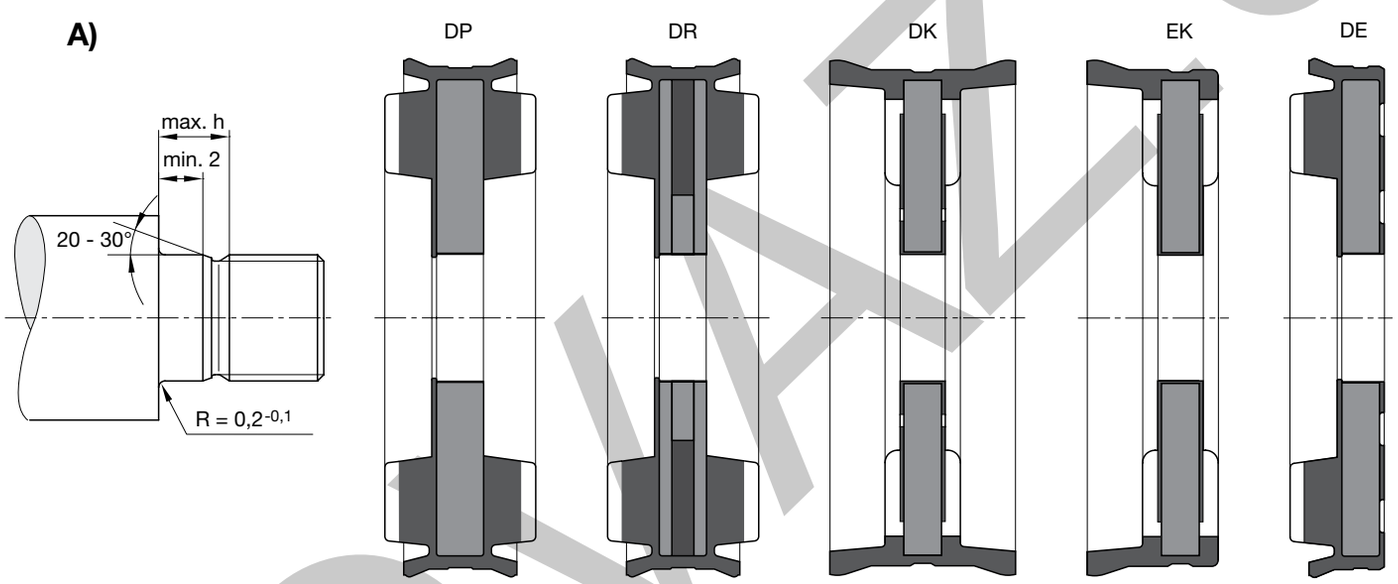

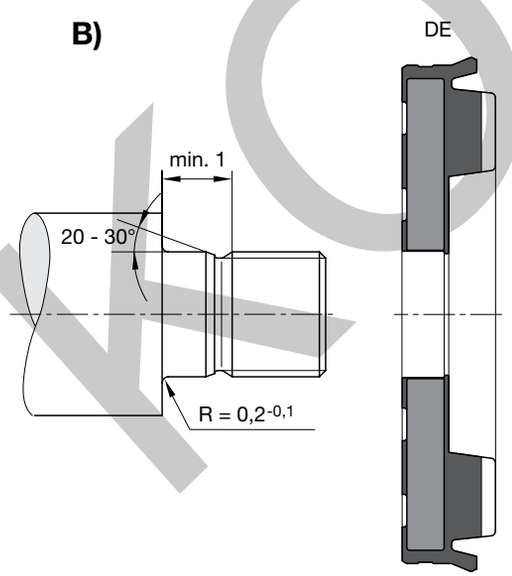

KOVAZ CZ

PTFE seals

Installation guidelines for PTFE seals

The grooves must be carefully cleaned and deburred. The cylinder bore must have a lead-in chamfer. When fitting the piston sealing ring there is always the danger that the ring may tilt and be sheared off by normal lead-in chamfers (see fig. 1). We therefore recommend that up to a cylinder diameter of 230 mm a lead-in chamfer according to fig. 2 or detail »A« is considered. In the case of smaller rings which are especially liable to bending we recommend an open-groove design for diameters smaller than 30 mm.

Fig. 1

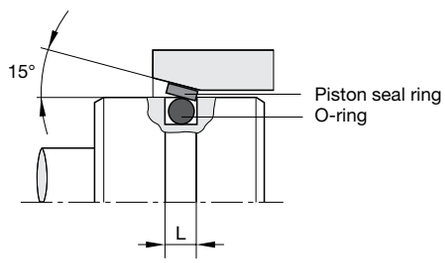

Fig. 2

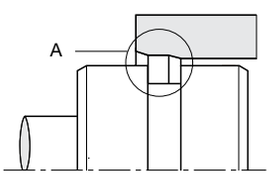

Detail A

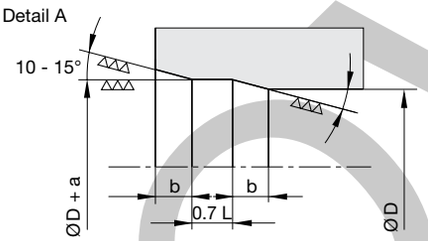

Ø D	min. a	min. b
≤ 45	0.8	2.4
45 - 175	1.0	3.0
175 - 230	1.5	4.5

Assembly instruction for PTFE seals

Install the O-ring in the groove as per normal practice. Piston sealing rings of up to 100 mm diameter and wall thickness of over 1.6 mm should be “slowly” expanded and fitted with an assembly tool (see fig. 3). Pre-heating to 60 °C in hydraulic oil is advantageous. Larger rings can be expanded by hand. Uneven stretching or overstretching must be avoided under all circumstances.

Should it be necessary to pull the rings over existing guide ring grooves, then these grooves must be covered with plastic tape, or alternatively the expanding mandrel must reach the groove in question (see fig. 3). This ensures that the piston sealing ring does not snap into the wrong groove.

The use of a burnishing shell is recommended when the assembly of a piston is made difficult by an overstretched ring or when the cylinder has an inadequate lead-in chamfer (see fig.4).

Assembly aids can be manufactured conveniently out of metal. However, in many cases polyamide or POM is also suitable.

Fig. 3

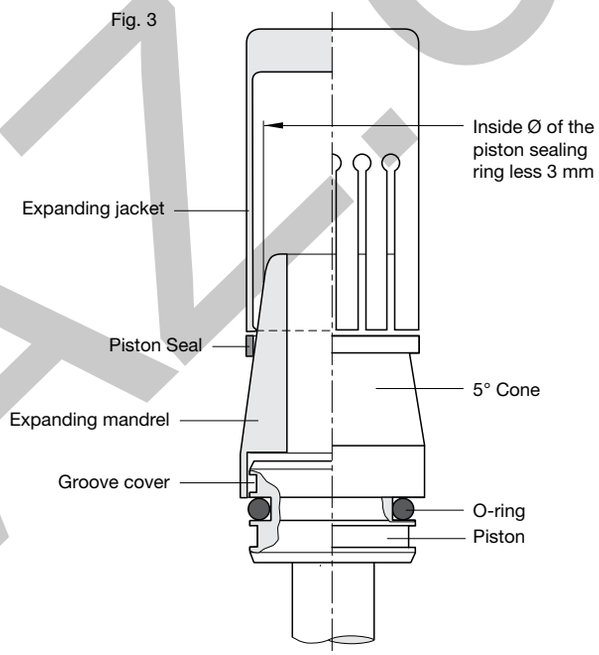

Fig. 4

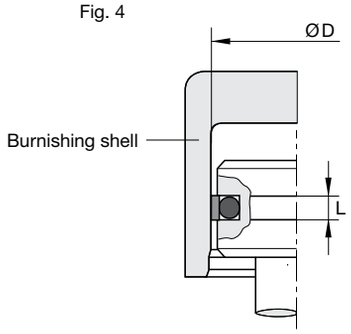

KOVAZ.cz

International (ISO) and national (DIN) standards for seal housing dimensions are in place and should be considered. For seals requiring a special groove, e.g. special seals, valve seals, rotor seals etc., the groove dimensions are stated separately. In general, the surface finishes, leading edge chamfers and dimensions stated here have already proved themselves and will mostly be found in the standards.

We recommend that customers adhere to the tolerances and surface finishes stated in this catalogue. This is a pre-requisite for easy, damage-free installation and for the seal to retain the properties stated in this catalogue.

Surfaces: Grinding as final machining process for dynamic sealing surfaces is not sufficient. These surfaces have to be polished afterwards.

Radii: As for the necessary radii please refer to the respective profile data or the applicable standards.

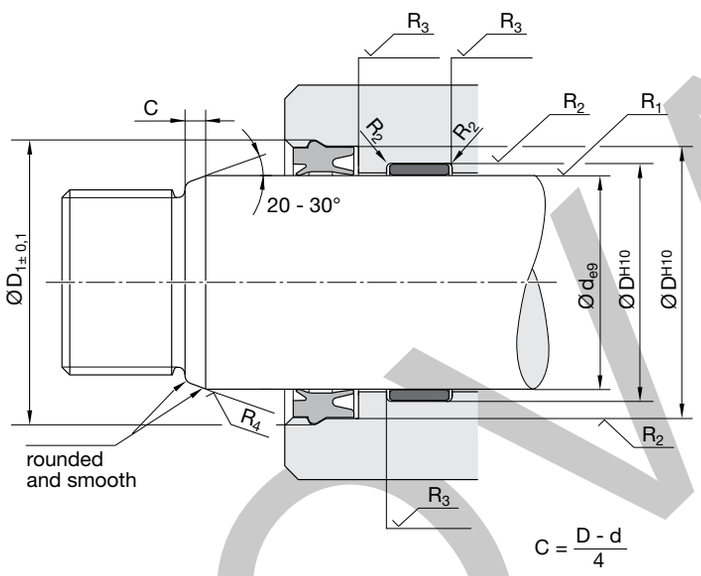

Surfaces

Dynamic sealing surfaces
For rubber and PTFE products
R_1: R_z 1.0 µm / R_a 0.2 µm
80 % ≤ $*t_{p1}$ ≤ 95 %

For polyurethane products
R_1: R_z 1.6 µm / R_a 0.4 µm
60 % ≤ $*t_{p1}$ ≤ 80 %

Static sealing surfaces
R_2: R_z 6.3 µm / R_a 0.8 µm
$*t_{p2}$ ≥ 60 %

Non-sealing surfaces and lead-in chamfers
R_3: R_z 16 µm / R_a 4 µm
R_4: R_z 10 µm / R_a 1.6 µm

* Measured in a depth of 25 % of the R_t-value based on a reference level (zero line) set at 5 % bearing area.

KOVAZ.CZ

PTFE seals

Installation guidelines for PTFE seals
The grooves must be carefully cleaned and deburred. The rods must have a lead-in chamfer (see picture on previous page).
We recommend open-groove designs for rod diameters smaller than 30 mm as these rings are prone to breaking if deformed as described above.

Assembly instruction for PTFE seals
First the O-ring must be installed in the groove. Then the rod seal should be carefully formed into a kidney shape without sharp bends as shown in fig. 2. This deformed ring is placed in the groove and rounded with the aid of a pin.

Fig. 1: Another type of installation aid. It consists of a metal pin which has a female cone-shaped recess at one of its front-ends. The PTFE ring can be easily placed in the recess by manually deforming it (see fig. 2). Due to the reduced diameter the PTFE ring (still placed on the pin) can now be installed into the groove. After removal of the pin the PTFE ring can be pressed into the groove and re-formed.

Fig. 1

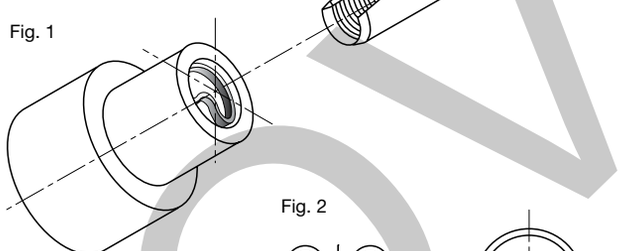

Fig. 2

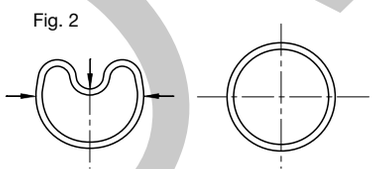

KOVAZ.CZ

Definition

The maximum gap “e”, stated with the respective profile, stands for the maximum gap occuring between rod and guidance resp. between piston and cylinder exhausting all tolerances and maximum excentricity.

Conditions

1. Surface quality according to our recommendations (see “General installation guidelines”).
2. Lubricating fluids.

For special conditions, e.g. nonlub fluids, water, acids, alcalies, please contact our Consultancy Service.

The nomographs in our catalogues have been developed for the “worst case”, that means pushing conditions (for the rod e.g. plunger conditions) and softest material in the corresponding group (e.g. 85 Shore A for polyurethanes and 70 Shore A for NBR).

If the application is not in a pushing mode, the extrusion gap can be increased by 25 %.

If instead of a 85 Shore A polyurethane a 93 Shore material or instead of a 70 Shore NBR a 85 Shore material is used, the extrusion gap can be increased by another 15 % (intermediate values to be balanced).

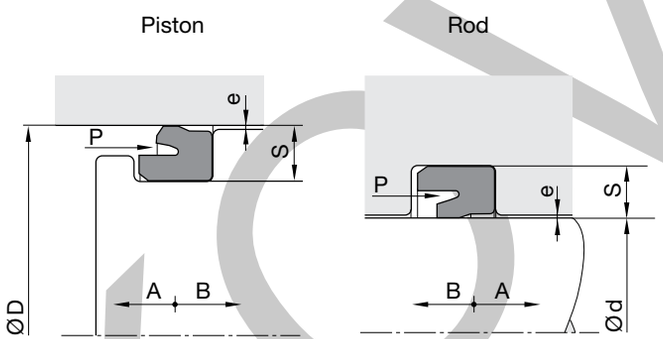

A = pushing
B = pulling

Example 1:
Polyurethane seals of Shore A ≥ 85 and cotton-reinforced seals

(see following pages)

d/D = Dynamic seal diameter = 63 mm*
S = Cross-section = 5 mm
P = Pressure = 10 bar
T = Temperature = 80 °C

* Insert the dynamic diameter and not the static one (groove diameter or tight fit). Means cylinder diameter for the piston seal (D) and rod diameter for the rod seal (d).

Method:
1. Draw a line connecting d/D to S and extend it until intersection with the line ξ1.
2. Draw a line connecting P to T and extend it until intersection with the line ξ2.
3. Connect the two intersections and read the allowable gap (0.71 mm) on scale “e”.

Example 2:
NBR, HNBR and FKM seals between 70 and 85 Shore A

(see following pages)

d/D = Dynamic seal diameter = 50 mm*
S = Cross-section = 5 mm
P = Pressure = 16 bar
T = Temperature = 50 °C

* Insert the dynamic diameter and not the static one (groove diameter or tight fit). Means cylinder diameter for the piston seal (D) and rod diameter for the rod seal (d).

Method:
1. Draw a line connecting d/D to S and extend it until intersection with the line ξ1.
2. Draw a line connecting P to T and extend it until intersection with the line ξ2.
3. Connect the two intersections and read the allowable gap (0.64 mm) on scale “e”.

KOVAZ.CZ

Polyurethane seals of Shore A ≥ 85 and cotton-reinforced seals

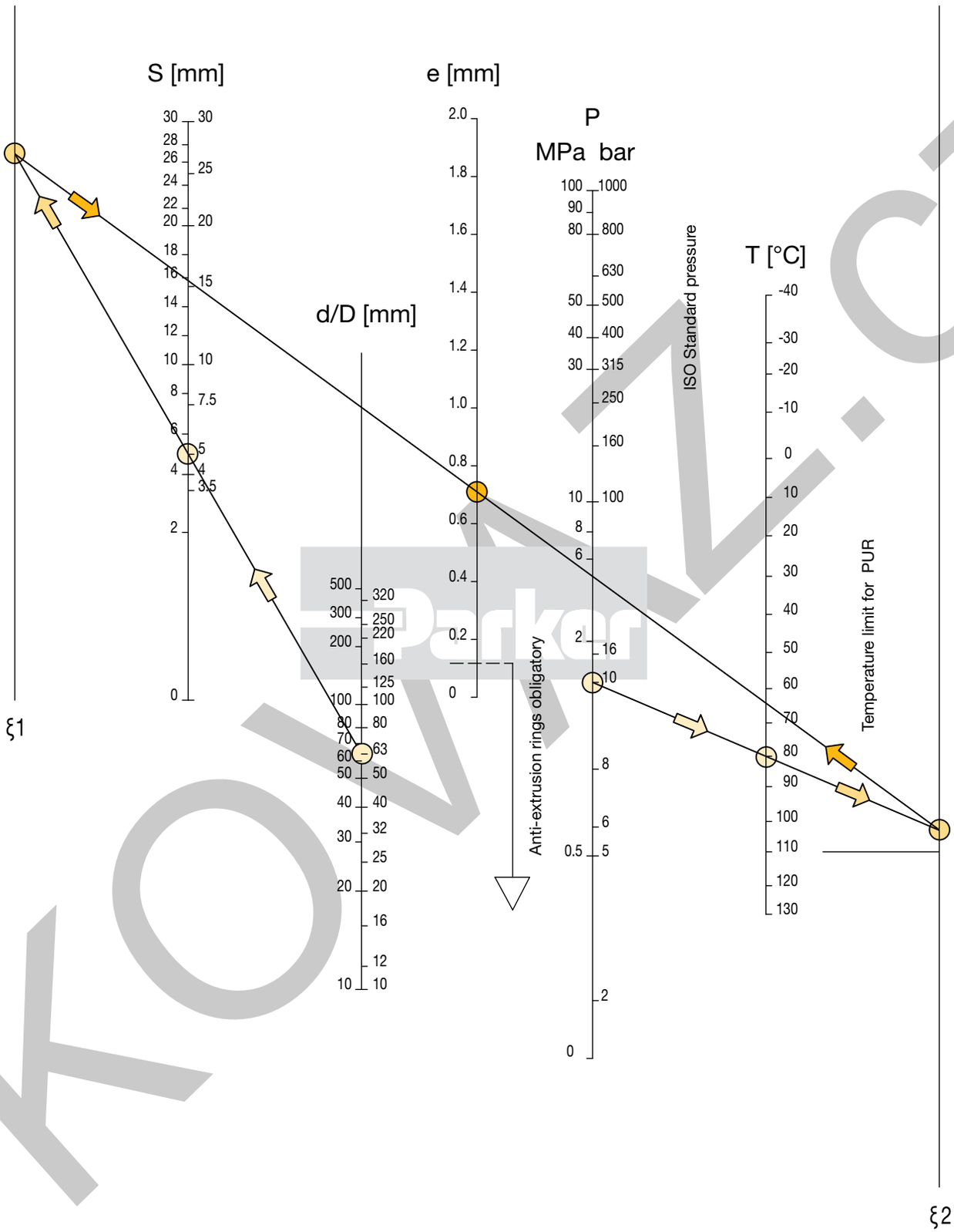

KOVAZ.CZ
Parker

NBR, HNBR and FKM seals between 70 and 85 Shore

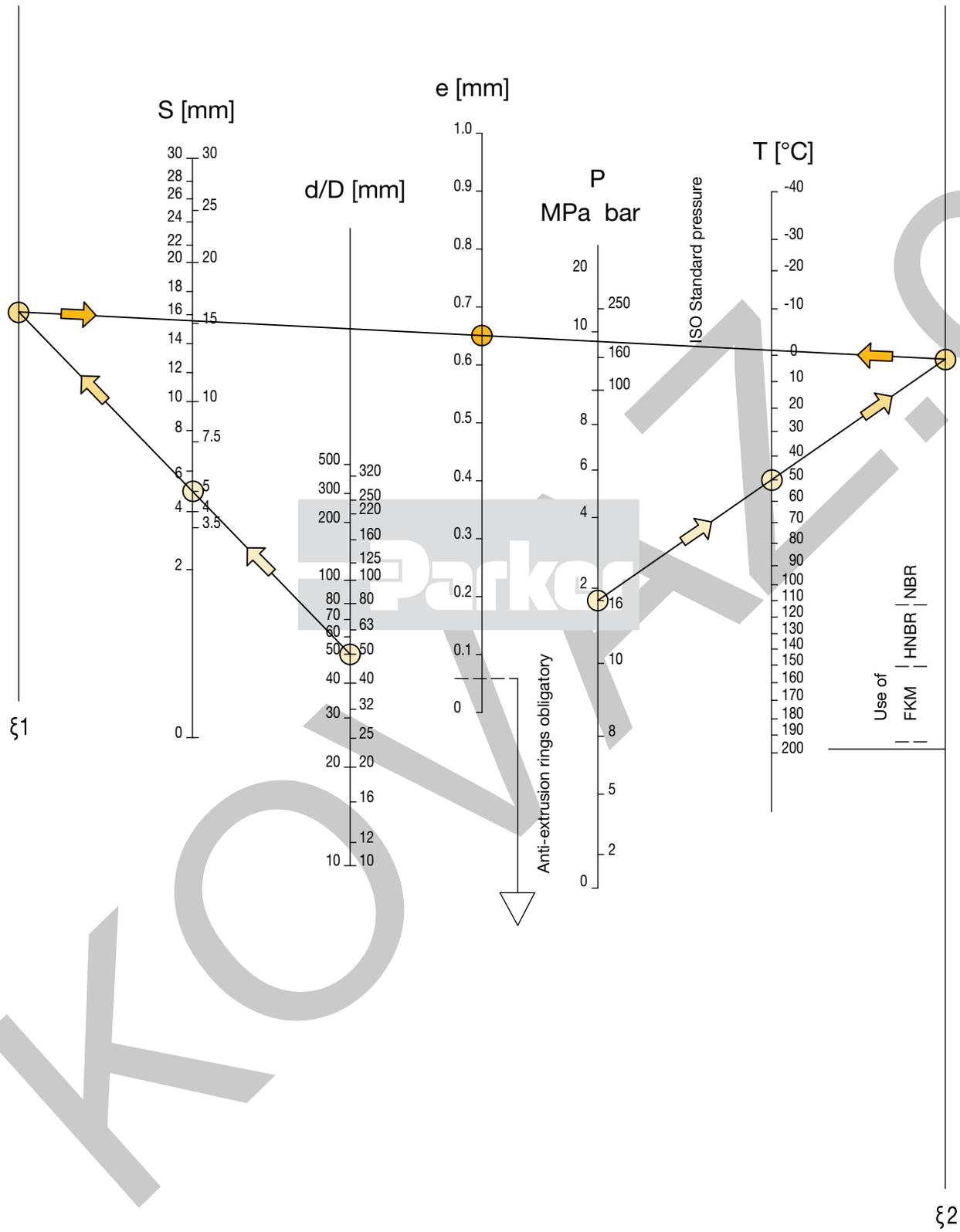

KOVAX.CZ

KOVAZ.CZ

Profile cross-section	Profile reference	Page
Rod seals		
	E5	26
	Z9	28
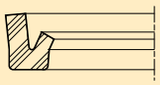	C1	30
Rod seals with wiper		
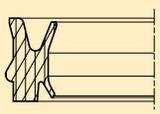	EU	35
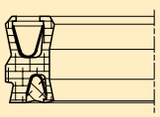	E7	37
	E8	39
	E9	41
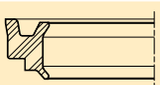	EL	43
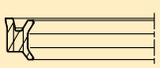	EM	45
Rod seals with wiper for anti-rotation pneumatic cylinders		
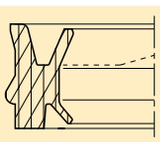	ET	47
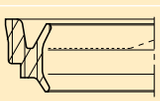	EF	49
Rod seals with wiper and guiding element		
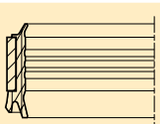	EP	51

KOVA

The profile E5 rod seal is a lip seal specially developed for use in pneumatics. The dimensions of the standard E5 profile series correspond to the rod diameters according to ISO 3320 and CETOP RP 51 P and are fully interchangeable with the C1 profile standard series formerly used in pneumatics.

- Due to application-optimized geometry and compounds suitable for use in lubricated as well as in oil-free air (after initial lubrication on assembly).
- Robust seal profile for harshest operating conditions.
- Good wear resistance.
- Long service life thanks to application-optimized compounds.
- Smooth running due to optimum lubricant-retaining sealing lip geometry.
- Easier installation.
- High temperature resistance in case of suitable compound selection.
- Excellent media resistance in case of suitable compound selection.
- Installation in closed and undercut housings.

Range of application

Working pressure	≤ 16 bar
Working temperature	-30 °C to +80 °C
Surface speed	≤ 1 m/s
Media	Oiled as well as oil-free compressed air (after initial lubrication during assembly).

Compounds

Standard: N3578, NBR compound (≈ 75 Shore A)
for low temperatures: N8602, NBR compound (≈70 Shore A)
for high temperatures: V8550, FKM compound (≈ 80 Shore A
Standard: P5010, PUR compound (≈ 90 Shore A)
for low temperatures: P5009, PUR compound (≈ 94 Shore A)

Installation

The profile E5 lip seals can be easily snapped into the groove. In order to prevent damage to the seal lips during assembly, any sharp edges in the vicinity of the groove must be removed. The dynamic seal lip will only acquire its ultimate functional size if the dimensions of the installation groove are properly machined after installation.
Under dry operating conditions it is absolutely essential to maintain a full lubrication film on the rod. This is ensured by appropriate initial lubrication. When using the profile E5 lip seal in pneumatic cylinders under non-lubricated conditions, a suitable wiper which does not destroy the lubrication film on the piston rod must be used. In this case, we recommend our profile A2 wiper specially designed for pneumatics.

Note: For nominal diameters ≤ 25 mm an open housing is recommended depending on the cross-section of the seal and the position of the groove (stuffing box installation).

In case of special operating conditions (specific pressure loads, temperature, speed, use in water, HFA, HFB fluids etc.), please contact our consultancy service for a selection of the material and design best suiting your particular application requirements.

KOVAZ.cz

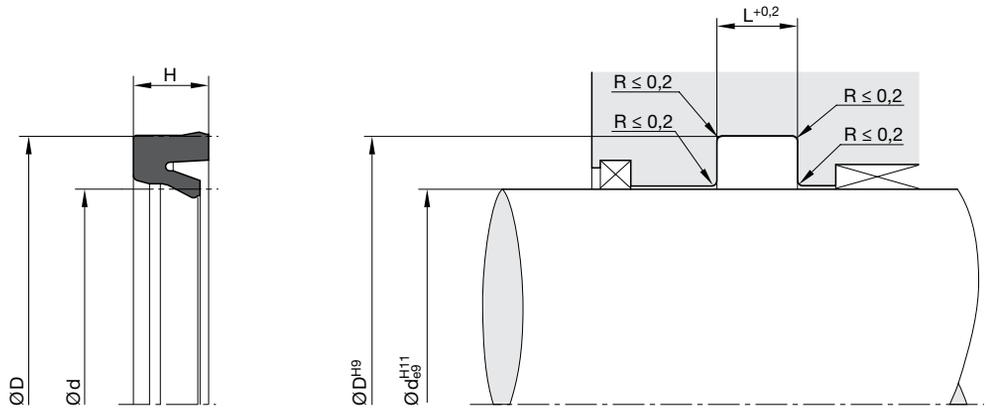

For surface finish, lead in chamfer and other installation dimensions see “General installation guidelines”.

d	D	H	L	Order code
E5 NBR N3578				
3	10	5	5.5	E5 0002 N3578
4	8	3	3.5	E5 0003 N3578
5	9	2.5	3	E5 0005 N3578
6	12	4	4.5	E5 0026 N3578
8	12.7	4.5	5	E5 0068 N3578
8	13	4	4.5	E5 0070 N3578
8	14	4	4.5	E5 0080 N3578
9	15	4.5	5	E5 0090 N3578
10	15	3.5	4	E5 1015 N3578
10	16	4.5	5	E5 1016 N3578
10	17	6	6.5	E5 1017 N3578
10	18	5	5.5	E5 1018 N3578
10	18	5.5	6	E5 1019 N3578
12	18	4.5	5	E5 1217 N3578
12	19	4.5	5	E5 1219 N3578
12	20	5.5	6	E5 1220 N3578
12	22	7.5	8	E5 1222 N3578
14	22	5	5.5	E5 1422 N3578
14	22	5.5	6	E5 1423 N3578
16	22	4	4.5	E5 1622 N3578
16	24	5.5	6	E5 1624 N3578
16	26	7	7.5	E5 1626 N3578
18	25	5	5.5	E5 1804 N3578
18	26	5.5	6	E5 1805 N3578
18	24	4	4.5	E5 1824 N3578
20	28	5.5	6	E5 2028 N3578
20	30	7.5	8	E5 2030 N3578
20	32	7.5	8	E5 2032 N3578
22	30	5.5	6	E5 2230 N3578
22	32	6.5	7	E5 2232 N3578
23	31	7	7.5	E5 2331 N3578
25	35	7	7.5	E5 2534 N3578
25	35	7.5	8	E5 2535 N3578
30	40	6	6.5	E5 3039 N3578
30	40	7.5	8	E5 3040 N3578
32	42	7	7.5	E5 3264 N3578
35	45	7.5	8	E5 3545 N3578
40	48	8	9	E5 4048 N3578
40	50	7.5	8	E5 4050 N3578
42	52	7	7.5	E5 4205 N3578
44	54	7	7.5	E5 4454 N3578
45	55	7	7.5	E5 4555 N3578
50	60	7	7.5	E5 5060 N3578
54	64	7	7.5	E5 5464 N3578
55	70	11.5	12.5	E5 5570 N3578
56	66	7	7.5	E5 5666 N3578
63	75	7	7.5	E5 6372 N3578
63	75	8.5	9.5	E5 6375 N3578
70	80	7	7.5	E5 7080 N3578
80	92	8.5	9.5	E5 8092 N3578
E5 PUR P5010				
10	18	5	5.5	E5 1018 P5010
12	20	5.5	6	E5 1220 P5010
20	30	7.5	8	E5 2030 P5010

Further sizes on request.

The profile Z9 rod seal is a lip seal specially developed for use in pneumatics.

- Due to application-optimized geometry and compounds suitable for use in lubricated as well as in oil-free air (after initial lubrication on assembly).
- Good wear resistance.
- Low static and dynamic friction thanks to miniaturized design.
- Smooth running due to optimum lubricant-retaining sealing lip geometry.
- High temperature resistance in case of suitable compound selection.
- Excellent media resistance in case of suitable compound selection.
- Installation in closed and undercut housings.

Range of application

Working pressure	≤ 16 bar
Working temperature	-20 °C to +80 °C
Surface speed	≤ 1 m/s
Media	Oiled as well as oil-free compressed air (after initial lubrication during assembly).

Compounds

Standard: N3580, a special NBR-based SFR® elastomer (≈ 80 Shore A). This compound offers excellent running properties, especially in the semi-frictional area.
for low temperatures: N8602, NBR compound (≈ 70 Shore A)
for high temperatures: V3664, FKM compound (≈ 85 Shore A)

Installation

The profile Z9 lip seals can be easily snapped into the groove. To avoid damaging the seal lips during installation, sharp edges should be removed from around the installation groove. The groove dimensions determine the size of the dynamic lip. It is therefore essential to ensure that he groove is accurately machined. It is important to maintain a full lubrication film on the rod when running under non-lubricated conditions. Lubrication should take place during assembly. When using the profile Z9 lip seal under non-lubricated conditions, care should be taken to ensure that the lubrication film is not destroyed by the wiper. For this case we recommend our wiper profile A2, specially designed for pneumatics.

Note: For nominal diameters ≤ 25 mm an open housing is recommended, according to the cross-section of the sals and the position of the groove (stuffing box installation).

In case of special operating conditions (specific pressure loads, temperature, speed, use in water, HFA, HFB fluids etc.), please contact our consultancy service for a selection of the material and design best suiting your particular application requirements.

KOVAZ.cz

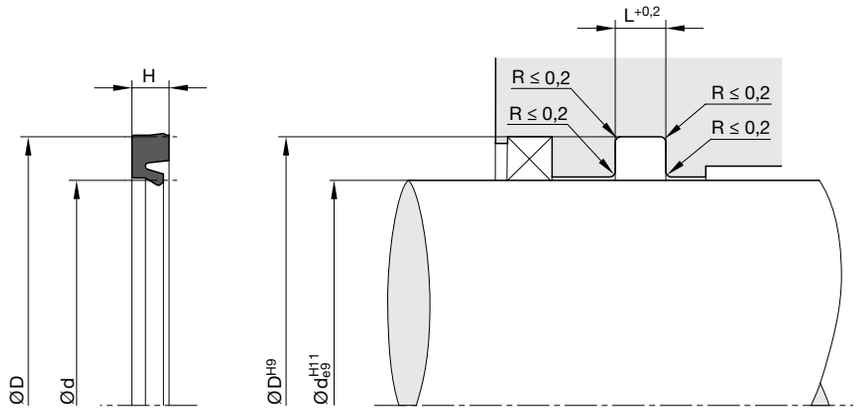

For surface finish, lead in chamfer and other installation dimensions see “General installation guidelines”.

d	D	H	L	Order code
3	6	2.2	2.6	Z9 0303 N3580
3	6.5	2.2	2.6	Z9 0304 N3580
10	16	2.55	3	Z9 1004 N3580
12	18	2.55	3	Z9 1204 N3580
16	22	2.55	3	Z9 1605 N3580
17	24	2.55	3	Z9 1724 N3580
19.15	25.15	3.25	3.5	Z9 1915 N3580

Further sizes on request.

KOVAZ.CZ

The profile C1 rod seal meets the requirements of the manufacturers of hydraulic and pneumatic equipment for seals with the smallest possible housings. Although cross-sections and heights are very small, the sealing performance is excellent.

Extremely low friction is experienced because of the short contact of the sealing surface area. Back-up rings or brackets are not required because of the special design.

Use in pneumatic equipment is only possible when consistent supply of lubricant such as oiled air is assured. For installation in non-lubricated pneumatic systems (dry air) we recommend our profile E5 which fits into the same housings.

- Good wear resistance.
- Easier installation.
- High temperature resistance in case of suitable compound selection.
- Excellent media resistance in case of suitable compound selection.
- Suitable compounds available for special requirements of the chemical process industry.
- Suitable compounds available for special requirements of the food processing industry.
- Installation in closed and undercut housings.

Range of application

The profile C1 rod seal is especially recommended for plungers, piston rods, stems and valve lifters as well as for slowly operating pneumatic rotors ($v \leq 0{,}2$ m/s).

Working pressure [1]	
Hydraulics	≤ 160 bar
Pneumatics	≤ 16 bar
for rotary transmissions	≤ 20 bar
Working temperature	
Hydraulics	-35 °C to +100 °C
Pneumatics	-35 °C to +80 °C
Surface speed	
Hydraulics	≤ 0.5 m/s
Pneumatics	≤ 1 m/s
for rotary transmissions	≤ 0.2 m/s

Recommendation for rotary transmissions: $P \cdot v \leq 3$
(Definition see catalogue “Hydraulic Seals”, chapter “Other, Rotary Seals”, introduction.)

[1] Dependent upon cross-section and compound.

Compounds

Standard: N3571, NBR compound (≈ 70 Shore A)
for low temperatures: N8602, NBR compound (≈ 70 Shore A)
for high temperatures: V3664, FKM compound (≈ 85 Shore A)

Installation

The profile C1 rod seals are manufactured over-sized on the external diameters in relation to the nominal dimensions. This ensures the required tight fit. Only after installation the sealing lip diameter will show the desired dimensions. Profile C1 can easily be snapped into the grooves.
When choosing a seal for a particular diameter, it is best to select the one with the largest possible cross-section.

KOVAZ.cz

Note: For nominal diameters ≤ 25 mm an open housing is recommended, according to the seals cross-section and the position of the groove (stuffing box installation).

In case of special operating conditions (specific pressure loads, temperature, speed, use in water, HFA, HFB fluids etc.), please contact our consultancy service for a selection of the material and design best suiting your particular application requirements.

KOVAZ.cz

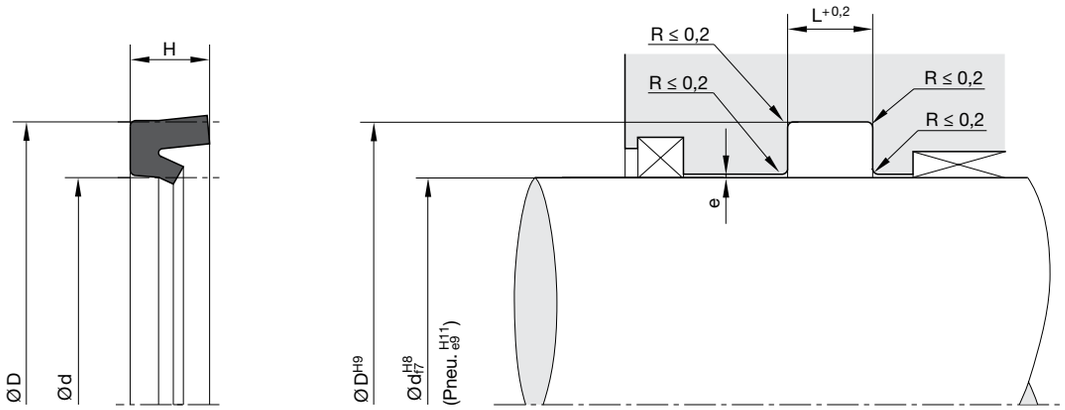

"e" see chapter "Maximum gap allowance"

For surface finish, lead in chamfer and other installation dimensions see "General installation guidelines".

d	D	H	L	Order code
2	7	3.5	4	C1 0003 N3571
3	7	3	3.5	C1 0005 N3571
3	9	4.5	5	C1 0009 N3571
3	10	5	5.5	C1 0011 N3571
4	8	3	3.5	C1 0013 N3571
4	9	3.5	4	C1 0016 N3571
4	10	4.2	4.7	C1 0019 N3571
4	12	4.5	5	C1 0022 N3571
4	12	5.5	6	C1 0024 N3571
4	14	5.8	6.3	C1 0028 N3571
4.5	8	3	3.5	C1 0032 N3571
5	9	2.5	3	C1 0035 N3571
5	10	4	4.5	C1 0038 N3571
5	12	4.5	5	C1 0041 N3571
6	10	3	3.5	C1 0055 N3571
6	12	4.2	4.7	C1 0058 N3571
6	13	5	5.5	C1 0059 N3571
6	15	7	7.5	C1 0062 N3571
6	16	5	5.5	C1 0065 N3571
7	13	4	4.5	C1 0070 N3571
8	14	4	4.5	C1 0074 N3571
8	14.5	4.5	5	C1 0077 N3571
8	16	5.5	6	C1 0080 N3571
8	18	8	8.5	C1 0083 N3571
9	14	3.5	4	C1 0087 N3571
9.3	14	3	3.5	C1 0090 N3571
9.5	18.5	7	7.5	C1 0094 N3571
10	13.6	2.3	2.7	C1 1002 N3571
10	15	3.5	4	C1 1005 N3571
10	16	4.5	5	C1 1008 N3571
10	16	6	6.5	C1 1011 N3571
10	18	5.5	6	C1 1015 N3571
10	20	7	7.5	C1 1018 N3571
10.4	15.2	3.5	4	C1 1020 N3571

d	D	H	L	Order code
11	17	4	4.5	C1 1022 N3571
11	18	4.5	5	C1 1025 N3571
12	18.5	4.5	5	C1 1028 N3571
12	19	4.5	5	C1 1030 N3571
12	20	5.5	6	C1 1033 N3571
12.75	19.2	3.8	4.3	C1 1035 N3571
13	17.5	2.8	3.3	C1 1036 N3571
13.8	22	5.5	6	C1 1037 N3571
14	19	3.5	4	C1 1039 N3571
14	20	4.8	5.3	C1 1040 N3571
14	22	5.5	6	C1 1041 N3571
14	25	8	8.5	C1 1042 N3571
15	22	5	5.5	C1 1044 N3571
15.8	24	5.5	6	C1 1047 N3571
16	22.5	4.5	5	C1 1049 N3571
16	23	5.5	6	C1 1051 N3571
16	23.5	5.5	6	C1 1052 N3571
16	24	5.5	6	C1 1053 N3571
16	26	7	7.5	C1 1056 N3571
16	27	7.5	8	C1 1058 N3571
17	25	5.5	6	C1 1060 N3571
18	25	4.5	5	C1 1062 N3571
18	25	5.5	6	C1 1063 N3571
18	26	5.5	6	C1 1066 N3571
18	30	8.5	9.5	C1 1070 N3571
18.5	25.5	5.5	6	C1 1074 N3571
19	25	5	5.5	C1 1079 N3571
20	26	4	4.5	C1 2003 N3571
20	26	4.8	5.3	C1 2005 N3571
20	28	5.5	6	C1 2009 N3571
20	28	8	8.5	C1 2013 N3571
20	30	7	7.5	C1 2020 N3571
20	32	7	7.5	C1 2022 N3571
22	29	5.5	6	C1 2025 N3571

Further sizes on request.

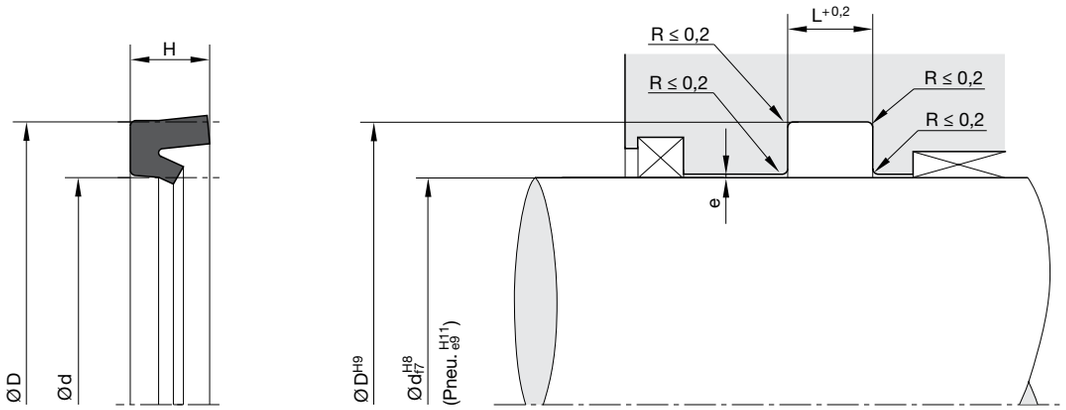

"e" see chapter "Maximum gap allowance"

For surface finish, lead in chamfer and other installation dimensions see "General installation guidelines".

d	D	H	L	Order code
22	30	5.5	6	C1 2029 N3571
22	32	7	7.5	C1 2031 N3571
22	32	8	8.5	C1 2030 N3571
22	34	8.5	9.5	C1 2033 N3571
23	31	5.5	6	C1 2038 N3571
24	32	5.5	6	C1 2043 N3571
25	32	5.5	6	C1 2053 N3571
25	33	5.5	6	C1 2058 N3571
25	33	8	8.5	C1 2061 N3571
25	35	6	6.5	C1 2064 N3571
25	35	7	7.5	C1 2065 N3571
25	36	8	8.5	C1 2066 N3571
25	37	8.5	9.5	C1 2069 N3571
25	40	10	11	C1 2075 N3571
26	36	7	7.5	C1 2078 N3571
28	36	5.5	6	C1 2085 N3571
28	38	7	7.5	C1 2089 N3571
28	40	8.5	9.5	C1 2095 N3571
30	38	5.5	6	C1 3005 N3571
30	38	8	8.5	C1 3010 N3571
30	40	7	7.5	C1 3015 N3571
30	42	8	8.5	C1 3019 N3571
30	42	8.5	9.5	C1 3020 N3571
32	40	5.5	6	C1 3025 N3571
32	42	7	7.5	C1 3030 N3571
32	45	10	11	C1 3032 N3571
33	43	7	7.5	C1 3035 N3571
34	44	7	7.5	C1 3040 N3571
35	43	8	8.5	C1 3045 N3571
35	45	7	7.5	C1 3050 N3571
36	44	5.5	6	C1 3605 N3571
36	46	7	7.5	C1 3055 N3571
36	50	10	11	C1 3057 N3571
37	47	7	7.5	C1 3059 N3571

d	D	H	L	Order code
38	48	7	7.5	C1 3060 N3571
40	48	8	8.5	C1 4010 N3571
40	50	7	7.5	C1 4015 N3571
40	52	8.5	9.5	C1 4020 N3571
42	52	7	7.5	C1 4025 N3571
44	54	7	7.5	C1 4030 N3571
45	53	5.5	6	C1 4505 N3571
45	55	7	7.5	C1 4035 N3571
45	60	10	11	C1 4040 N3571
46	56	7	7.5	C1 4046 N3571
47	57	7	7.5	C1 4055 N3571
48	58	7	7.5	C1 4060 N3571
50	58	8	8.5	C1 5005 N3571
50	60	7	7.5	C1 5010 N3571
50	63	8.5	9.5	C1 5015 N3571
50	63	12	13	C1 5017 N3571
50	66	11	12	C1 5020 N3571
54	64	7	7.5	C1 5035 N3571
55	65	7	7.5	C1 5040 N3571
56	66	7	7.5	C1 5043 N3571
56	70	12	13	C1 5044 N3571
57	67	7	7.5	C1 5053 N3571
58	68	7	7.5	C1 5058 N3571
59	71	7.5	8	C1 5085 N3571
60	72	8.5	9.5	C1 6005 N3571
60	80	14	15	C1 6010 N3571
63	73	7	7.5	C1 6025 N3571
63	75	8.5	9.5	C1 6035 N3571
63	78	8.5	9.5	C1 6036 N3584
63	80	16	17	C1 6037 N3571
64	76	7.5	8	C1 6040 N3571
65	77	8.5	9.5	C1 6055 N3571
68	80	8.5	9.5	C1 6070 N3571
70	82	8.5	9.5	C1 7003 N3571

Further sizes on request.

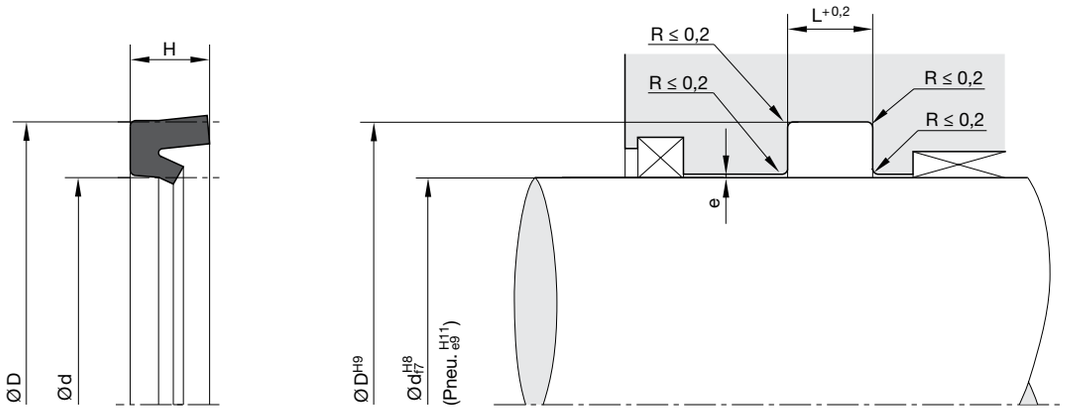

"e" see chapter "Maximum gap allowance"

For surface finish, lead in chamfer and other installation dimensions see "General installation guidelines".

d	D	H	L	Order code
75	87	8.5	9.5	C1 7020 N3571
75	95	14	15	C1 7030 N3571
80	90	7	7.5	C1 8010 N3571
80	92	7.5	8	C1 8013 N3571
80	92	8.5	9.5	C1 8015 N3571
80	100	14	15	C1 8025 N3571
85	97	8.5	9.5	C1 8040 N3571
85	100	10	11	C1 8045 N3571
88	100	8.5	9.5	C1 8070 N3571
90	102	6.5	7	C1 9014 N3571
90	102	8.5	9.5	C1 9015 N3571
90	110	16	17	C1 9018 N3571
95	107	8.5	9.5	C1 9035 N3571
100	110	7	7.5	C1 A010 N3571
100	115	10	11	C1 A015 N3571
105	120	10	11	C1 A051 N3571
105	125	12	13	C1 A055 N3571
110	125	10	11	C1 B015 N3571
110	130	14	15	C1 B020 N3571
115	130	10	11	C1 B040 N3571
115	135	14	15	C1 B045 N3571
120	135	10	11	C1 C015 N3571
120	140	14	15	C1 C020 N3571
125	140	10	11	C1 C035 N3571
125	145	12	13	C1 C037 N3571
130	145	10	11	C1 D015 N3571
130	150	14	15	C1 D020 N3571
135	150	10	11	C1 D035 N3571
140	160	14	15	C1 E015 N3571
142	157	10	11	C1 E035 N3571
145	165	12	13	C1 E049 N3571
145	165	13	14	C1 E050 N3571
150	170	14	15	C1 F020 N3571
154	176	15.5	16.5	C1 F040 N3571

d	D	H	L	Order code
155	170	10	11	C1 F053 N3571
155	175	14	15	C1 F055 N3571
160	180	14	15	C1 G015 N3571
160	184	15	16	C1 G024 N3571
166	188	15.5	16.5	C1 G040 N3571
170	190	14	15	C1 H007 N3571
170	194	15	16	C1 H010 N3571
180	200	14	15	C1 J005 N3571
185	210	17.5	18.5	C1 J025 N3571
185	215	20	21	C1 J032 N3571
190	210	14	15	C1 K010 N3571
200	220	14	15	C1 L015 N3571
200	230	15	16	C1 L025 N3571
210	230	14	15	C1 L040 N3571
220	250	20	21	C1 M017 N3571
225	250	14	15	C1 M020 N3571
235	265	21	22	C1 M030 N3571
240	270	20	21	C1 N035 N3571
260	280	14	15	C1 O007 N3571
260	290	21	22	C1 O010 N3571
280	310	20	21	C1 O031 N3571
310	330	14	15	C1 Q001 N3571
320	350	20	21	C1 Q050 N3571

Further sizes on request.

The self-retaining EU rod seal/wiper ring for pneumatic cylinder piston rods performs three functions simultaneously:
Sealing, wiping, fixing.

- Due to application-optimized geometry and compounds suitable for use in oiled as well as in oil-free air (after initial lubrication on assembly).
- Bi-functional element: seal and wiper.
- Robust seal profile for harshest operating conditions.
- Extreme wear resistance.
- No risk of corrosion since the combined retainer and wiper part eliminates the need for additional wire circlips.
- Long service life due to coordinated geometries of the functional lips and compound selection.
- Smooth running due to optimum lubricant-retaining sealing lip geometry.
- Excellent media resistance in case of suitable compound selection.
- Identical housing for E7, E8, E9, EU, EF and ET.
- Installation in open housings.
- Low compression set.
- The coordinated geometries of the seal and wiper lips achieve favourable friction coefficients and long service life.

Range of application

Working pressure	≤ 16 bar
Working temperature	-35 °C to +80 °C [1)]
Surface speed	≤ 1 m/s
Media	Oiled as well as oil-free compressed air (after initial lubrication during assembly).

[1)] For higher temperatures, see profile E9.

Compounds

Standard: P5008, PUR Compound (≈ 94 Shore A)
for low temperatures: P5009, PUR Compound (≈ 94 Shore A)

Installation

The profile EU rod seal wiper is pushed into the housing with a circlip recess conforming to DIN 7993 (type B) and retained by the easy-to-snap in retainer ridge.
During assembly, care should be taken that neither the wiper nor the sealing lip be damaged by being pushed over any sharp edges.

In case of special operating conditions (specific pressure loads, temperature, speed, use in water, HFA, HFB fluids etc.), please contact our consultancy service for a selection of the material and design best suiting your particular application requirements.

KOVAZ.cz

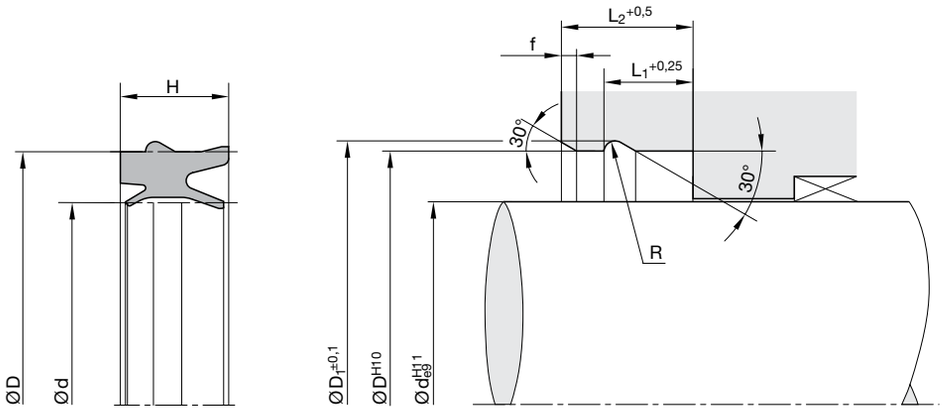

For surface finish, lead in chamfer and other installation dimensions see “General installation guidelines”.

d	D	H	D_1	L_1	L_2	R	f	Order code
10	18	10.7	20	8.8	13	1.1	1.5	EU 1018 P5008
12	19	10	21	7.7	12	1	1.5	EU 1219 P5008
12	20	10.7	22	8.8	13	1.1	1.5	EU 1205 P5008
12	22	10.7	24	8.8	13	1.1	1.5	EU 1222 P5008
14	24	10.7	26	8.8	13	1.1	1.5	EU 1424 P5008
16	26	10.7	28	8.8	13	1.1	1.5	EU 1626 P5008
18	26	10.7	28	8.8	13	1.1	1.5	EU 1826 P5008
18	28	10.7	30	8.8	13	1.1	1.5	EU 1828 P5008
20	30	10.7	32	8.8	13	1.1	1.5	EU 2029 P5008
22	32	11.2	34.5	9.4	14	1.4	2	EU 2205 P5008
25	35	11.2	37.5	9.4	14	1.4	2	EU 2535 P5008
30	40	11.2	42.5	9.4	14	1.4	2	EU 3040 P5008
32	42	11.2	44.5	9.4	14	1.4	2	EU 3242 P5008
40	50	11.2	52.5	9.4	14	1.4	2	EU 4050 P5008
45	55	12.2	58.2	10.4	15	1.8	2	EU 4555 P5008
50	60	12.2	63.2	10.4	15	1.8	2	EU 5060 P5008
63	75	13	78.2	11.4	16	1.8	2	EU 6375 P5008

Further sizes on request.

The self-retaining E7 rod seal/wiper is a version of the profil EU for extreme working conditions with regard to temperature and chemical resistance and dry running.
It performs three functions simulatenously:
Sealing, wiping, fixing.

- Due to application-optimized geometry and compounds suitable for use in oiled as well as in oil-free air (after initial lubrication on assembly).
- Bi-functional element: seal and wiper.
- Outstanding dry running propperties
- No risk of corrosion since the combined retainer and wiper part eliminates the need for additional wire circlips.
- Minimal break-away and dynamic friction and no stick-slip tendency ensures uniform motion even at low speeds.
- Easy snap assembly without assembly aids.
- Product geometry prevents dirt deposits at the front face of the cylinder.
- Identical housing for E7, E8, E9, EU, EF and ET.

Range of application

Working pressure	≤ 16 bar
Working temperature	
E7 Z4017	-30 °C to +80 °C
E7 Z4016	-35 °C to +200 °C
Speed surface	≤ 1 m/s
Media	Oiled as well as oil-free compressed air (after initial lubrication during assembly).

Compounds

Standard: Z4017 (Polon® 314, UHMW-PE, conform to FDA)
for higher temperatures and/or chemical resistance requirements (but with slightly reduced service life): Z4016 (Polon® 074, PTFE + 10 % carbon fibre)

Installation

The rod seal/wiper E7 is pushed into the housing with a circlip recess conforming to DIN 7993 (type B) and retained by the easy-to-snap in retainer ridge. During assembly, care should be taken that neither the wiper nor the sealing lips be damaged by being pushed over any sharp edges.

In case of special operating conditions (specific pressure loads, temperature, speed, use in water, HFA, HFB fluids etc.), please contact our consultancy service for a selection of the material and design best suiting your particular application requirements.

KOVAZ.cz

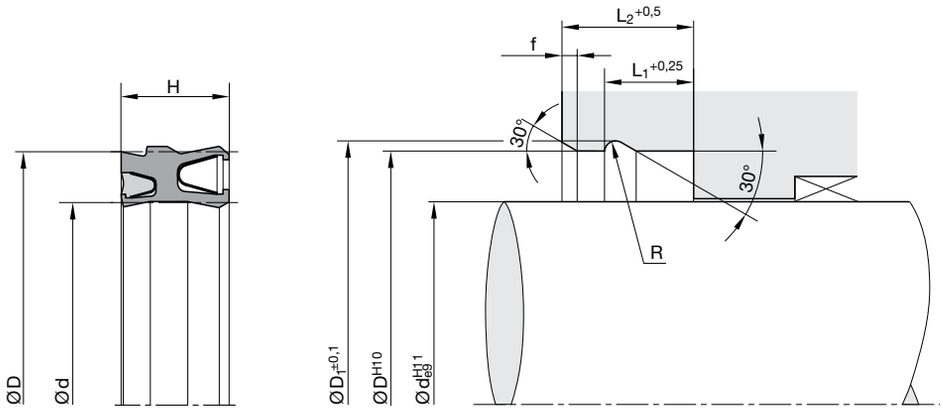

For surface finish, lead in chamfer and other installation dimensions see “General installation guidelines”.

d	D	H	D_1	L_1	L_2	R	f	Order code
10	18	10.7	20	8.8	13	1.1	1.5	E7 1018 Z4017
12	20	10.7	22	8.8	13	1.1	1.5	E7 1205 Z4017
12	22	10.7	24	8.8	13	1.1	1.5	E7 1222 Z4017
14	24	10.7	26	8.8	13	1.1	1.5	E7 1424 Z4017
16	26	10.7	28	8.8	13	1.1	1.5	E7 1626 Z4017
18	28	10.7	30	8.8	13	1.1	1.5	E7 1828 Z4017
20	30	10.7	32	8.8	13	1.1	1.5	E7 2029 Z4017
22	32	11.2	34.5	9.4	14	1.4	2	E7 2205 Z4017
25	35	11.2	37.5	9.4	14	1.4	2	E7 2535 Z4017
30	40	11.2	42.5	9.4	14	1.4	2	E7 3040 Z4017
32	42	11.2	44.5	9.4	14	1.4	2	E7 3242 Z4017
40	50	11.2	52.5	9.4	14	1.4	2	E7 4050 Z4017
45	55	12.2	58.2	10.4	15	1.8	2	E7 4555 Z4017
50	60	12.2	63.2	10.4	15	1.8	2	E7 5060 Z4017
63	75	13	78.2	11.4	16	1.8	2	E7 6375 Z4017

Further sizes on request.

The self-retaining pneumatic rod seal/wiper set profile E8 for piston rods in pneumatic cylinders combines three functions:
Sealing, wiping, fixing.

The split design of the sealing set allows optimal adaptation of the materials to the requirements of the individual component (wiper and/or seal).

- Due to application-optimized geometry and compounds suitable for use in oiled as well as in oil-free air (after initial lubrication on assembly).
- Bi-functional element: seal and wiper.
- Good wear resistance.
- No risk of corrosion since the combined retainer and wiper part eliminates the need for additional wire circlips.
- Long service life due to coordinated geometries of the functional lips and compound selection.
- Smooth running due to optimum lubricant-retaining sealing lip geometry.
- High temperature resistance in case of suitable compound selection.
- Excellent media resistance in case of suitable compound selection.
- Product geometry prevents dirt deposits at the front face of the cylinder.
- Identical housing for E7, E8, E9, EU, EF and ET.
- Installation in open housings.
- The coordinated geometries of the seal and wiper lips achieve favourable friction coefficients and long service life.

Range of application

Working pressure	≤ 16 bar
Working temperature	-20 °C to +80 °C [1]
Surface speed	≤ 1 m/s
Media	Oiled as well as oil-free compressed air (after initial lubrication during assembly).

[1] For higher temperatures, see profile E9.

Compounds

The sealing part of the profile E8 pneumatic rod seal/wiper is made of a special SFR® elastomer N3580 (NBR-based) with a hardness of approx. 80 Shore A.
This compound has excellent running properties, especially in the semi-frictional area.
The profile EA fixing/scraping part is made of the highly wear resistant W5035 plastic material.

Installation

The pneumatic profile E8 rod seal/wiper set is fitted into the housing by means of a circlip recess according to DIN 7993 (type B). The sealing part is pushed in and fixed by the EA retainer/wiper, which snaps in easily. During assembly, care should be taken to ensure that neither the scraper nor the sealing lips be damaged by sharp edges.

In case the seal/wiper set needs to be exchanged, this can be accomplished without removing the piston rod if a dismantling recess has been provided for.

In case of special operating conditions (specific pressure loads, temperature, speed, use in water, HFA, HFB fluids etc.), please contact our consultancy service for a selection of the material and design best suiting your particular application requirements.

KOVAZ.cz

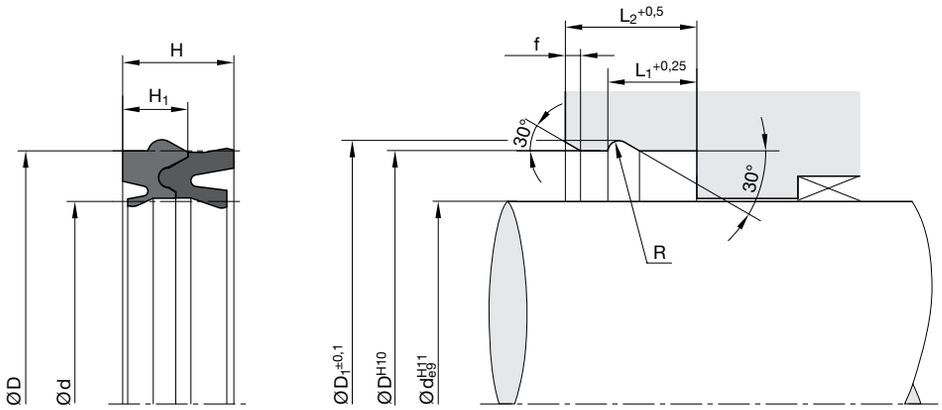

For surface finish, lead in chamfer and other installation dimensions see “General installation guidelines”.

d	D	H	H_1	D_1	L_1	L_2	R	f	Order code
12	19	10	5.9	21	8	12.3	1.1	1.5	E8 0009 00606
12	20	10.3	5.5	22	8.8	13	1.1	1.5	E8 0011 00606
12	22	11	5.5	24	8.8	13	1.1	1.5	E8 0012 00606
14	24	11	5.5	26	8.8	13	1.1	1.5	E8 0014 00606
16	26	11	5.5	28	8.8	13	1.1	1.5	E8 0016 00606
18	28	11	5.5	30	8.8	13	1.1	1.5	E8 0018 00606
18	26	11	5.5	28	8.8	13	1.1	1.5	E8 0036 00606
20	30	11	5.5	32	8.8	13	1.1	1.5	E8 0020 00606
22	32	11.5	6.45	34.5	9.4	14	1.4	2	E8 0022 00606
25	35	11.5	6.45	37.5	9.4	14	1.4	2	E8 0025 00606
28	38	11.5	6.45	40.5	9.4	14	1.4	2	E8 0028 00606
30	40	11.5	6.45	42.5	9.4	14	1.4	2	E8 0030 00606
32	42	11.5	6.45	44.5	9.4	14	1.4	2	E8 0032 00606
35	45	11.5	6.45	47.5	9.4	14	1.4	2	E8 0035 00606
40	50	11.5	6.45	52.5	9.4	14	1.4	2	E8 0040 00606
45	55	12.5	7.45	58.2	10.4	15	1.8	2	E8 0045 00606
50	60	12.5	7.45	63.2	10.4	15	1.8	2	E8 0050 00606
63	75	13	7.45	78.2	11.4	16	1.8	2	E8 0063 00606

Further sizes on request.

The E9 pneumatic seal/wiper ring for pneumatic cylinder piston rods is the high-temperature version of the profiles E8 and EU.

- Due to application-optimized geometry and compounds suitable for use in oiled as well as in oil-free air (after initial lubrication on assembly).
- Bi-functional element: seal and wiper.
- Good wear resistance.
- Smooth running due to optimum lubricant-retaining sealing lip geometry.
- High temperature resistance in case of suitable compound selection.
- Excellent media resistance in case of suitable compound selection.
- Identical housing for E7, E8, E9, EU, EF and ET.
- Installation in closed and undercut housings.
- The coordinated geometries of the seal and wiper lips achieve favourable friction coefficients and long service life.

Range of application

Working pressure	≤ 16 bar
Working temperature	-10 °C to +150 °C
Surface speed	≤ 1 m/s
Media	Oiled as well as oil-free compressed air (after initial lubrication during assembly).

Compounds

Standard compound is a special FKM-based elastomer with a Shore hardness of approx. 81 A and a vulcanized metal disc (circlip according DIN 7993 type B).

Installation

The pneumatic profile E9 rod seal/wiper set is fitted into the housing by means of a circlip recess according to DIN 7993 (type B). The sealing part is pushed in and fixed by the circlip.
Damage to the scraper and the sealing lips by sharp edges must be prevented during assembly.

In case the seal/wiper set needs to be exchanged, this can be accomplished without removing the piston rod if a dismantling recess has been provided for (detail “X”).

In case of special operating conditions (specific pressure loads, temperature, speed, use in water, HFA, HFB fluids etc.), please contact our consultancy service for a selection of the material and design best suiting your particular application requirements.

KOVAZ.cz

Detail "X"

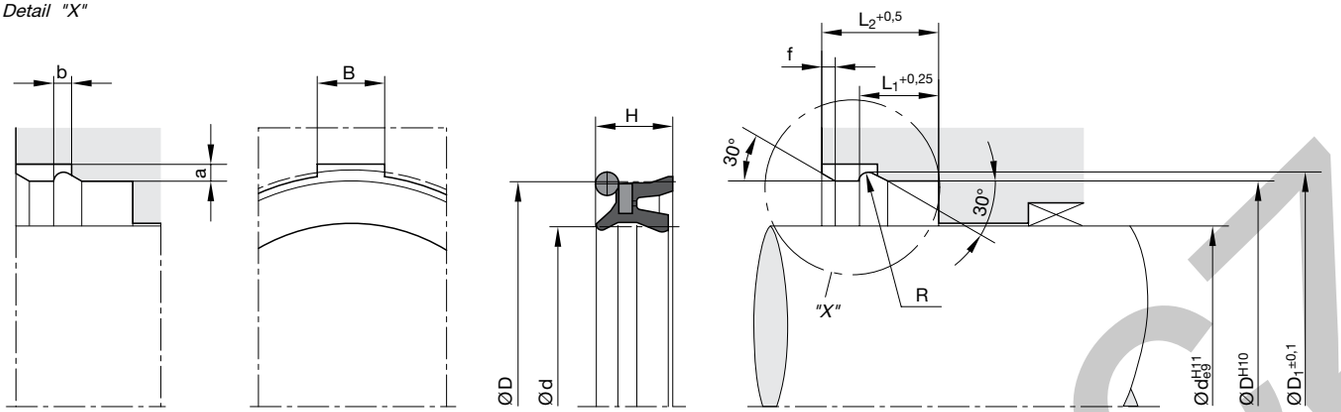

For surface finish, lead in chamfer and other installation dimensions see “General installation guidelines”.

d	D	H	D_1	L_1	L_2	R	a	b	B	f	Order code
12	20	8.5	22	8.8	13	1.1	1.8	2.2	4	1.5	E9 9011 00606
12	22	8.5	24	8.8	13	1.1	1.8	2.2	4	1.5	E9 9012 00606
16	26	8.5	28	8.8	13	1.1	1.8	2.2	5	1.5	E9 9016 00606
18	26	8.5	28	8.8	13	1.1	1.8	2.2	5	1.5	E9 9017 00606
18	28	8.5	30	8.8	13	1.1	1.8	2.2	5	1.5	E9 9018 00606
20	30	8.5	32	8.8	13	1.1	1.8	2.2	5	1.5	E9 9020 00606
22	32	8.5	34.5	9.4	14	1.4	2	2.8	7.5	2	E9 9022 00606
25	35	8.5	37.5	9.4	14	1.4	2	2.8	7.5	2	E9 9025 00606
32	42	8.5	44.5	9.4	14	1.4	2	2.8	7.5	2	E9 9032 00606
40	50	8.5	52.5	9.4	14	1.4	2	2.8	7.5	2	E9 9040 00606
50	60	8.5	63.2	10.4	15	1.8	2.5	3.6	10	2	E9 9050 00606
63	75	10	78.2	11.4	16	1.8	2.5	3.6	10	2	E9 9063 00606

Further sizes on request.

KOV.CZ

The pneumatic rod seal/wiper profile EL is a tried and proven combined element for rods in small pneumatic cylinders and valve shafts.

- Due to application-optimized geometry and compounds suitable for use in oiled as well as in oil-free air (after initial lubrication on assembly).
- Bi-functional element: seal and wiper.
- Extreme wear resistance.
- Smooth running due to optimum lubricant-retaining sealing lip geometry.
- Excellent media resistance in case of suitable compound selection.
- Short axial assembly length.
- Installation in closed and undercut housings.
- The coordinated geometries of the seal and wiper lips achieve favourable friction coefficients and long service life.

Range of application

Working pressure	
EL NBR N3582	≤ 10 bar
EL PUR P5008	≤ 16 bar
Working temperature	
EL NBR N3582	-10 °C to +80 °C
EL PUR P5008	-35 °C to +80 °C
Surface speed	≤ 1 m/s
Media	Oiled as well as oil-free compressed air (after initial lubrication during assembly).

Compounds

Standard: N3582, a special NBR-based SFR® elastomer (≈ 85 Shore A). This compound offers excellent running properties, especially in the semi-frictional area.
for low temperatures: N8613, NBR compound (≈ 80 Shore A)
for high temperatures: V3839, FKM compound (≈ 90 Shore A)
Standard: P5008, PUR compound (≈ 94 Shore A)
for low temperatures: P5009, PUR compound (≈ 94 Shore A)

Installation

The selfretaining profile EL pneumatic and seal/wiper is easily snapped into the groove before the piston is assembled into the cylinder.
Care should be taken that the sealing and the wiper lips are not damaged by sharp edges during installation. Initial lubrication on assembly is important for very long service life.

In case of special operating conditions (specific pressure loads, temperature, speed, use in water, HFA, HFB fluids etc.), please contact our consultancy service for a selection of the material and design best suiting your particular application requirements.

KOVAZ.CZ

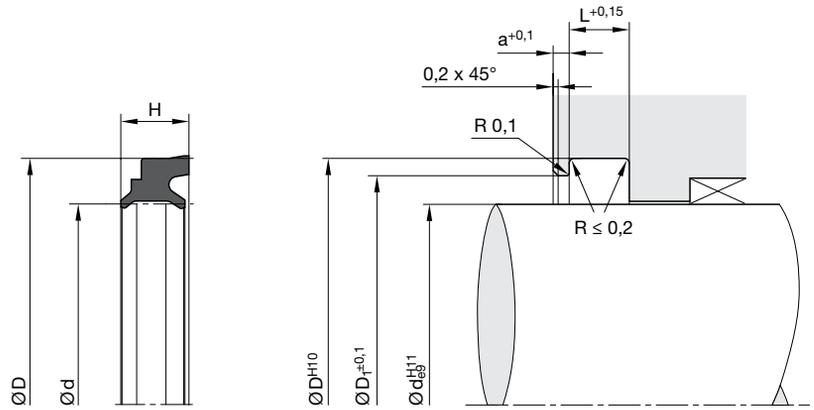

For surface finish, lead in chamfer and other installation dimensions see “General installation guidelines”.

d	D	H	D_1	L	a	Order code
EL NBR N3582						
4	8.2	4	6.7	3	0.8	EL 0040 N3582
6	11.2	5	9.1	3.6	1	EL 0058 N3582
8	14.2	5	12.1	3.6	1	EL 0082 N3582
10	16.2	6	14.1	4.2	1.2	EL 1016 N3582
12	18.2	6	15.5	4.2	1.2	EL 1018 N3582
16	23	6	18.8	4.2	1.2	EL 1060 N3582
EL PUR P5008						
4	8.2	4	6.7	3	0.8	EL 0040 P5008
6	11.2	5	9.1	3.6	1	EL 0058 P5008
6	12	7.4	9.2	5.4	1.2	EL 0060 P5008
8	14.2	5	12.1	3.6	1	EL 0082 P5008
10	16.2	6	14.1	4.2	1.2	EL 1016 P5008
10	18	7.9	14.2	5.9	1.2	EL 1017 P5008

Further sizes on request.

KOVAZ.CZ

The profile design of the profile EM rod seal/wiper combines the profile geometry of our tried and proven profile EL with the requirements of mini-pneumatics, i.e. the dimensions of profile EM are considerably smaller and friction values are even lower.

- Due to application-optimized geometry and compounds suitable for use in oiled as well as in oil-free air (after initial lubrication on assembly).
- Bi-functional element: seal and wiper.
- Extreme wear resistance.
- Low static and dynamic friction thanks to miniaturized design.
- Smooth running due to optimum adjustment of the functional lips.
- Smooth running due to optimum lubricant-retaining sealing lip geometry.
- Excellent media resistance in case of suitable compound selection.
- Short axial assembly length.
- Short radial assembly depth.
- Installation in closed and undercut housings.
- Low compression set.
- The coordinated geometries of the seal and wiper lips achieve favourable friction coefficients and long service life.

Range of application

Rod seal/wiper for mini-pneumatics.

Working pressure	≤ 16 bar
Working temperature	-30 °C to +80 °C
Surface speed	≤ 1 m/s
Media	Oiled as well as oil-free compressed air (after initial lubrication during assembly).

Compounds

Standard: P5010, PUR compound (≈ 90 Shore A)
for low temperatures: P5009, PUR compound (≈ 94 Shore A)
for high temperatures: V3839, FKM compound (≈ 90 Shore A)

Installation

The self-retaining rod seal/wiper profile EM is manually or automatically snapped into the installation housing while the piston rod is disassembled. Care is to be taken to prevent sharp edges from damaging the wiping and sealing lips during assembly. Initial lubrication is the prerequisite for very long operational life.

In case of special operating conditions (specific pressure loads, temperature, speed, use in water, HFA, HFB fluids etc.), please contact our consultancy service for a selection of the material and design best suiting your particular application requirements.

KOVAZ.CZ

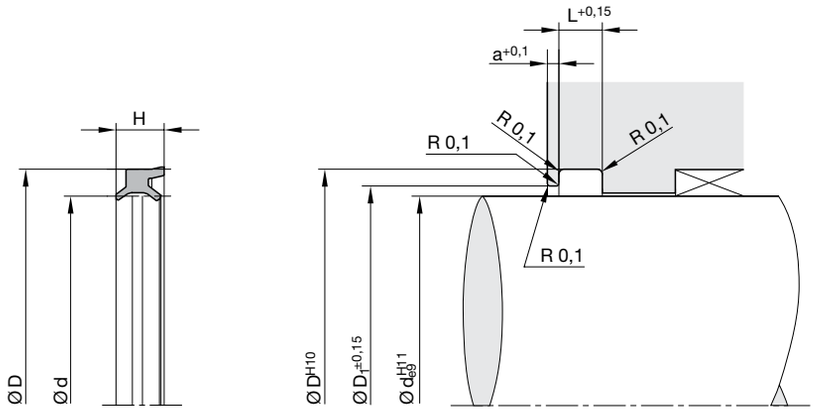

For surface finish, lead in chamfer and other installation dimensions see “General installation guidelines”.

d	D	H	D_1	L	a	Order code
3	5.6	2.8	4.6	2.7	0.6	EM 0302 P5010
4	7	2.8	5.6	2.7	0.8	EM 0407 P5010
5	8	2.8	7.1	2.7	0.8	EM 0508 P5010
6	9	2.8	8.1	2.7	1	EM 0609 P5010
8	11.5	3.2	10.1	3	1	EM 0811 P5010
10	14	3.7	12.1	3.4	1	EM 1014 P5010
12	16.5	4	14.1	3.7	1.2	EM 1214 P5010
14	18.5	4	16.1	3.7	1.2	EM 1418 P5010
16	20.5	4	18.1	3.7	1.2	EM 1620 P5010
18	22.5	4	20.1	3.7	1.2	EM 1822 P5010
20	25	4.6	23.1	4.15	1.2	EM 2025 P5010
22	27	4.6	23.9	4.15	1.2	EM 2227 P5010
25	30	4.6	26.9	4.15	1.2	EM 2530 P5010
30	35.5	5	32.1	4.55	1.2	EM 3035 P5010
32	37.5	5	34.1	4.55	1.2	EM 3237 P5010
35	40.5	5	37.1	4.55	1.2	EM 3505 P5010*
40	46	5.5	42.2	4.9	1.4	EM 4005 P5010*
45	51	5.5	47.2	4.9	1.4	EM 4505 P5010*
50	56	5.5	52.2	4.9	1.4	EM 5005 P5010*
63	69.5	6	65.4	5.4	1.4	EM 6306 P5010*

* Moulds not available on the date of printing.
Further sizes on request.

KOMZ.CZ

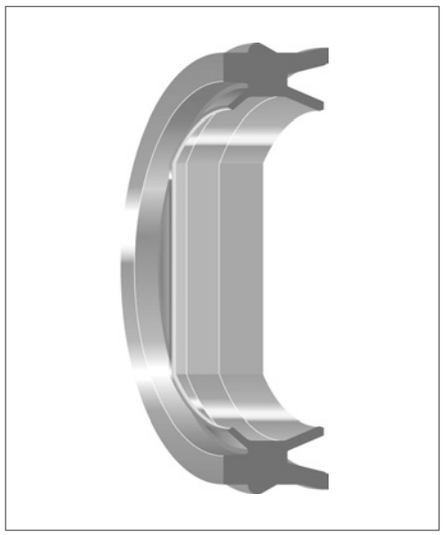

The self-retaining ET rod seal/wiper ring for flattened piston rods in non-rotating pneumatic cylinders is the oval counterpart to the EU round standard profile. It performs three functions simultaneously:
Sealing, wiping, fixing.

- Due to application-optimized geometry and compounds suitable for use in oiled as well as in oil-free air (after initial lubrication on assembly).
- Bi-functional element: seal and wiper.
- Extreme wear resistance.
- No risk of corrosion since the combined retainer and wiper part eliminates the need for additional wire circlips.
- Long service life due to coordinated geometries of the functional lips and compound selection.
- Smooth running due to optimum lubricant-retaining sealing lip geometry.
- Excellent media resistance in case of suitable compound selection.
- Identical housing for E7, E8, E9, EU, EF and ET.
- Installation in open housings.
- Low compression set.
- The coordinated geometries of the seal and wiper lips achieve favourable friction coefficients and long service life.

Range of application

For flattened rods of pneumatic cylinders protected against rotation.

Working pressure	≤ 10 bar
Working temperature	-35 °C to +80 °C
Surface speed	≤ 1 m/s
Media	Oiled as well as oil-free compressed air (after initial lubrication during assembly).

Compounds

Standard: P5008, PUR Compound (≈ 94 Shore A)
for low temperatures: P5009, PUR Compound (≈ 94 Shore A)

Installation

The profile ET rod seal/wiper is pushed into the housing with a circlip recess conforming to DIN 7993 (type B) and retained by the easy-to-snap in retainer ridge.
During assembly, care should be taken that neither the wiper nor the sealing lip be damaged by being pushed over any sharp edges.
The parallel surfaces of the guide sleeve and the seal must be accurately aligned with each other.

In case of special operating conditions (specific pressure loads, temperature, speed, use in water, HFA, HFB fluids etc.), please contact our consultancy service for a selection of the material and design best suiting your particular application requirements.

KOVAZ.CZ

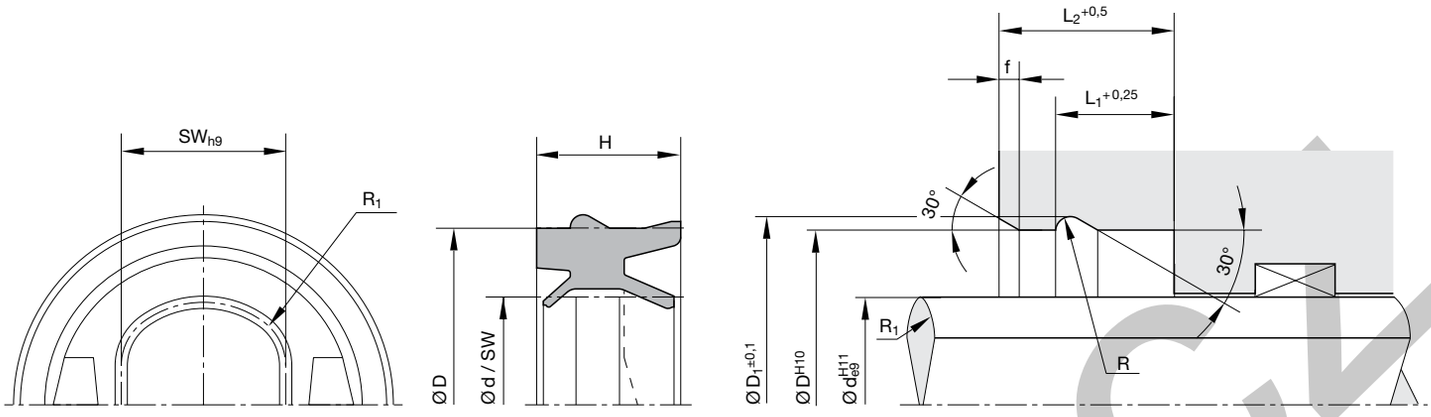

For surface finish, lead in chamfer and other installation dimensions see “General installation guidelines”.

d	SW	D	H	d_1	L_1	L_2	R	f	R_1	Order code
12	10	22	10.7	24	8.8	13	1.1	1.5	0.7 - 1.3	ET 1222 P5008
16	13	26	10.7	28	8.8	13	1.1	1.5	3.0 - 4.0	ET 1626 P5008
20	17	30	10.7	32	8.8	13	1.1	1.5	4.0 - 5.0	ET 2030 P5008
25	22	35	11.2	37.5	9.4	14	1.4	2	4.0 - 6.0	ET 2535 P5008
32	27	42	11.2	44.5	9.4	14	1.4	2	5.0 - 7.0	ET 3242 P5008

Further sizes on request.

KOVAZ CZ

The self-retaining EF rod seal/wiper ring for flattened piston rods in non-rotating pneumatic cylinders is the oval counterpart to the EL round standard profile. It performs three functions simultaneously:
Sealing, wiping, fixing.

- Due to application-optimized geometry and compounds suitable for use in oiled as well as in oil-free air (after initial lubrication on assembly).
- Bi-functional element: seal and wiper.
- Extreme wear resistance.
- Long service life due to coordinated geometries of the functional lips and compound selection.
- Smooth running due to optimum lubricant-retaining sealing lip geometry.
- Excellent media resistance in case of suitable compound selection.
- Product geometry prevents dirt deposits at the front face of the cylinder.
- Identical housing for E7, E8, E9, EU, EF and ET.
- Short axial assembly length.
- Installation in closed and undercut housings.
- The coordinated geometries of the seal and wiper lips achieve favourable friction coefficients and long service life.

Range of application

For flattened rods of pneumatic cylinders protected against rotation.

Working pressure	≤ 10 bar
Working temperature	-30 °C to +80 °C
Surface speed	≤ 1 m/s
Media	Oiled as well as oil-free compressed air (after initial lubrication during assembly).

Compounds

P5010, PUR-Compound (≈ 90 Shore A)

Installation

During assembly, care should be taken that neither the wiper nor the sealing lip be damaged by being pushed over any sharp edges.
The parallel surfaces of the guide sleeve and the seal must be accurately aligned with each other.

In case of special operating conditions (specific pressure loads, temperature, speed, use in water, HFA, HFB fluids etc.), please contact our consultancy service for a selection of the material and design best suiting your particular application requirements.

KOVAZ.cz

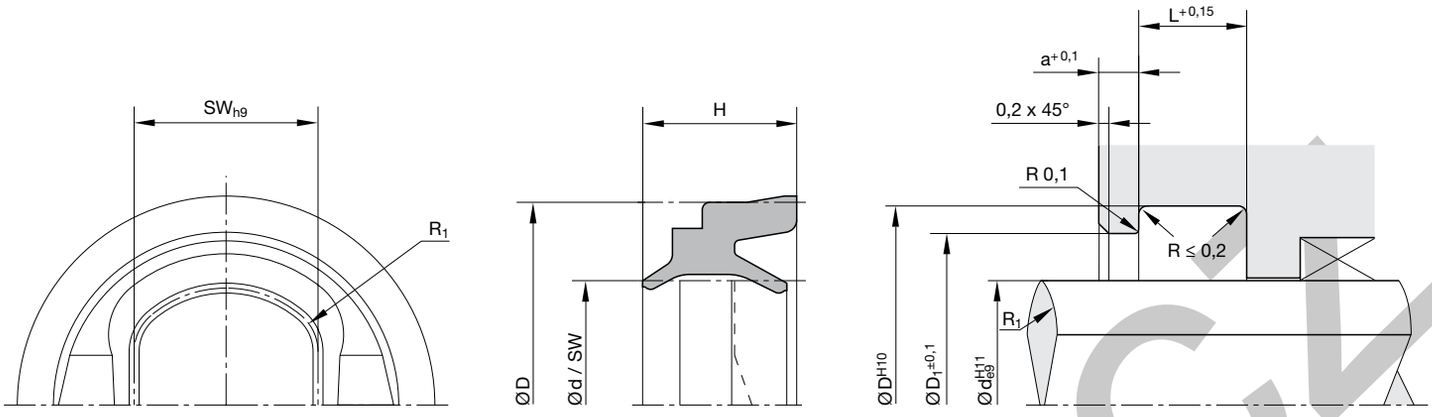

For surface finish, lead in chamfer and other installation dimensions see “General installation guidelines”.

d	SW	D	H	d_1	L	a	R	Order code
6	5	11.2	5	9.1	3.6	1	0.4 - 0.9	EF 0650 P5007
8	6	14.2	5	12.1	3.6	1	0.6 - 1.1	EF 0805 P5010
10	8	16.2	6	14.1	4.2	1.2	0.6 - 1.2	EF 1A39 P5010
12	10	18.2	6	15.5	4.2	1.2	0.7 - 1.3	EF 1218 P5010*
16	13	23	6	18.8	4.2	1.2	3.0 - 4.0	EF 1623 P5010*

KOVAZ CZ

* Moulds not available on the date of printing.
Further sizes on request.

The profile EP pneumatic rod seal, wiper and guidance system is used for rods in pneumatic cylinders. It combines the following functional features: **Sealing, wiping, fixing.**

- Due to application-optimized geometry and compounds suitable for use in oiled as well as in oil-free air (after initial lubrication on assembly).
- Multi-functional element: seal, wiper and guiding element.
- Extreme wear resistance.
- Smooth running due to optimum lubricant-retaining sealing lip geometry.
- Simple fabrication of the housing.
- Short radial assembly depth.
- Low compression set.
- The coordinated geometries of the seal and wiper lips achieve favourable friction coefficients and long service life.
- Multi-functionality provides warehousing cost benefits.

Range of application

Working pressure	≤ 16 bar
Working temperature	-35 °C to +80 °C
Surface speed	≤ 1 m/s
Media	Oiled as well as oil-free compressed air (after initial lubrication during assembly).

Compounds

The profile EP pneumatic rod seal, wiper and guidance system is made of a polyurethane compound (P5008) which we process in-house to ensure consistent quality.
The advantages of this compound are the high resistance to wear, the excellent compression set and the extended temperature range in comparison to conventional polyurethane compounds. The supporting/reinforcement part is made of an aluminum alloy chemically bonded to the polyurethane compound. Reinforcement parts made of other materials are available on request.

Installation

Profile EP is pressed into the bore and retained by a press fit between cylinder housing and an aluminum ring. Care should be taken that neither the scraper nor the sealing lips are damaged by sharp edges during installation. When pressing the sealing element into the groove, pressure should only be put upon the metal part. During a normal cylinder life span, replacement is not necessary. However, disassembly is possible after dismounting the cylinder head and forcing out the seal.

In case of special operating conditions (specific pressure loads, temperature, speed, use in water, HFA, HFB fluids etc.), please contact our consultancy service for a selection of the material and design best suiting your particular application requirements.

KOVAZ.cz

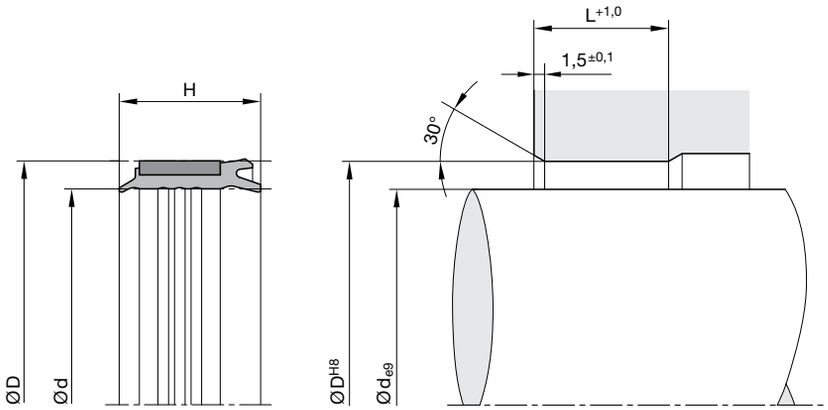

For surface finish, lead in chamfer and other installation dimensions see “General installation guidelines”.

d	D	H	L	Order code
8	15	17.5	15	EP 0815 Z5074
10	17	20.5	18	EP 1017 Z5074
11	19	20	17	EP 1119 Z5074
12	19	22.5	19.5	EP 1219 Z5074
14	21	23.5	20.5	EP 1421 Z5074
16	25	25.5	21.5	EP 1625 Z5074
18	27	28.5	23.5	EP 1827 Z5074
20	29	30.5	26.5	EP 2029 Z5074
22	31	30.5	26.5	EP 2231 Z5074
25	35	35.5	31.5	EP 2535 Z5074
30	41	41	37	EP 3041 Z5074
32	43	41	37	EP 3243 Z5074
35	46	41	37	EP 3546 Z5074
40	51	43	39	EP 4051 Z5074

Further sizes on request.

KOVAZ.CZ

Profile cross-section	Profile reference	Page
Piston seals, single-acting		
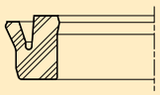	E4 (NBR)	54
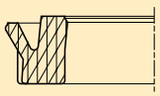	E4 (PUR)	56
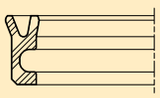	Z7	58
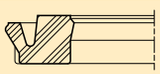	Z8 (NBR)	60
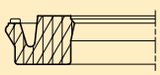	Z8 (PUR)	62
	C2	64
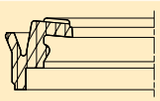	MK	67
Piston seals, double-acting		
	Z5	69
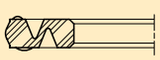	PZ	71
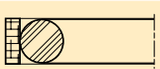	OA	73
Complete pistons, single-acting		
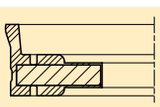	EK	76
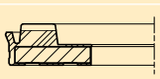	DE	78
Complete pistons, double-acting		
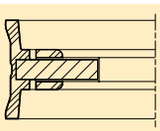	DK	80
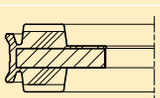	DP	83
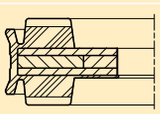	DR	85

KOVA

The profile E4 piston seal is a lip seal specially developed for use in pneumatics. The dimensions of the profile E4 standard series correspond to the cylinder diameters according to ISO 3320, CETOP RP 52 P, RP 43 P and RP 53 P. Profile E4 is fully interchangeable with the profile C2 standard series formerly used in pneumatics.

- Due to application-optimized geometry and compounds suitable for use in oiled as well as in oil-free air (after initial lubrication on assembly).
- Suitable for cylinders with dead-center cushioning.
- Good wear resistance.
- Long service life thanks to application-optimized compounds.
- Smooth running due to optimum lubricant-retaining sealing lip geometry.
- Easier installation.
- Suitable for fully automatic installation
- Assembly on one-part piston is possible.
- High temperature resistance in case of suitable compound selection.
- Excellent media resistance in case of suitable compound selection.
- Installation in closed housings.
- Special seal geometry ensures optimal function even in case of flow-controlled exhaust air.

Range of application

Working pressure	≤ 16 bar
Working temperature	-30 °C to +80 °C
Surface speed	≤ 1 m/s
Media	Oiled as well as oil-free compressed air (after initial lubrication during assembly).

Compounds

Standard: N3578, NBR compound (≈ 75 Shore A)
for low temperatures: N8613, NBR compound (≈ 80 Shore A)
for high temperatures: V3664, FKM compound (≈ 85 Shore A)

Installation

The profile E4 lip seals are simply pulled over the piston into the groove. To avoid damaging the seal lips during installation, sharp edges should be removed from the piston and the cylinder tube.
Under oil-free conditions it is important to obtain a solid lubrication film inside the cylinder tube. This must be achieved before assembly to ensure a long service life of the seal.
For piston guidance we recommend the profile F2 piston guidance tape. Please refer to our profile F2 for details of the piston outside diameter and the gap measurements.

In case of special operating conditions (specific pressure loads, temperature, speed, use in water, HFA, HFB fluids etc.), please contact our consultancy service for a selection of the material and design best suiting your particular application requirements.

KOVAZ.cz

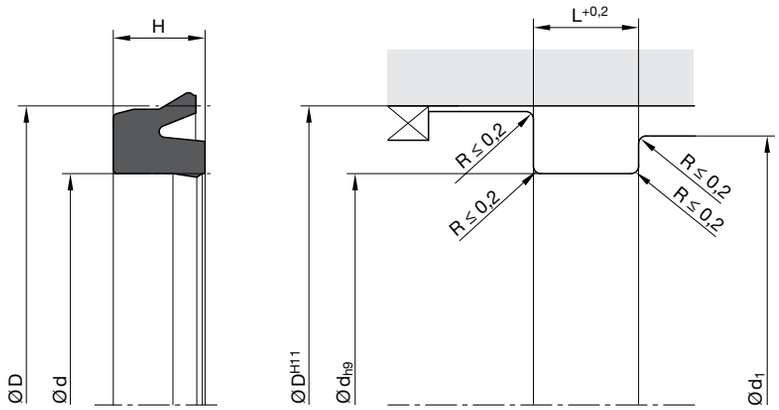

d_1 = minimum piston diameter on pressure side

For surface finish, lead in chamfer and other installation dimensions see “General installation guidelines”.

D	d	H	L	d_1	Order code
10	5	3	3.5	9	E4 1050 N3578
12	6	4	4.5	11	E4 1206 N3578
12	7	4	4.5	11	E4 1207 N3578
14	8	4	4.5	13	E4 1408 N3578
16	8	5.5	6	15	E4 1608 N3578
16	9	5	5.5	15	E4 1609 N3578
16	10	4	4.5	15	E4 1610 N3578
20	12	5.5	6	19	E4 2012 N3578
20	14	4	4.5	19	E4 2014 N3578
20.5	14	4	4.5	19.5	E4 2016 N3578
22	16	5	5.5	21	E4 2216 N3578
24	16	5.5	6	23	E4 2416 N3578
25	15.5	5.8	6.3	24	E4 2515 N3578
25	17	4.5	5	24	E4 2516 N3578
25	17	5.5	6	24	E4 2517 N3578
28	18	7	7.5	26.5	E4 2818 N3578
32	20	6.5	7	30	E4 3220 N3578
32	22	7	7.5	30.5	E4 3222 N3578
32	24	5.5	6	31	E4 3224 N3578
34	24	7	7.5	32.5	E4 3424 N3578
36	26	7	7.5	34.5	E4 3666 N3578
40	30	7	7.5	38.5	E4 4030 N3578
42	30	6	6.5	40	E4 4203 N3578
45	33	9	10	43	E4 4533 N3578
45	37	7	7.5	44	E4 4537 N3578
50	40	7	7.5	48.5	E4 5040 N3578
60	50	7	7.5	58.5	E4 6022 N3578
63	53	7	7.5	61.5	E4 6353 N3578
65	55	7	7.5	63.5	E4 6510 N3578
70	58	7	7.5	68	E4 7058 N3578
75	65	7.5	8	73.5	E4 7065 N3578
80	68	8.5	9.5	78	E4 8068 N3578
84	72	8.5	9.5	82	E4 8072 N3578
100	88	8.5	9.5	98	E4 A088 N3578

D	d	H	L	d_1	Order code
105	93	8.5	9.5	103	E4 A501 N3578
110	98	8.5	9.5	108	E4 B002 N3578
120	105	10	11	117.5	E4 C005 N3578
125	110	10	11	122.5	E4 C010 N3578
130	115	10	11	127.5	E4 D015 N3578
140	125	10	11	137.5	E4 E040 N3578
150	135	10	11	147.5	E4 F004 N3578
160	140	14	15	155	E4 G014 N3578
160	145	10	11	157.5	E4 G022 N3578
180	160	14	15	175	E4 J014 N3578
200	180	14	15	195	E4 L018 N3578
220	199	15	16	215	E4 M005 N3578
250	225	18	19	242.5	E4 N525 N3578
250	226	16	17	242.5	E4 N502 N3578
250	230	14	15	245	E4 N503 N3578
320	295	14	15	312.5	E4 Q205 N3578
320	295	17	18	312.5	E4 Q206 N3578
470	440	21	22	460	E4 R720 N3578

Further sizes on request.

E4 (PUR)

The profile E4 piston seal is a lip seal specially developed for use in pneumatics. The dimensions of the profile E4 standard series correspond to the cylinder diameters according to ISO 3320, CETOP RP 52 P, RP 43 P and RP 53 P. Profile E4 is fully interchangeable with the profile C2 standard series formerly used in pneumatics.

- Due to application-optimized geometry and compounds suitable for use in oiled as well as in oil-free air (after initial lubrication on assembly).
- Suitable for cylinders with dead-center cushioning.
- Robust seal profile for harshest operating conditions.
- Extreme wear resistance.
- Long service life thanks to application-optimized compounds.
- Smooth running due to optimum lubricant-retaining sealing lip geometry.
- Easier installation.
- Suitable for fully automatic installation
- Assembly on one-part piston is possible.
- Excellent media resistance in case of suitable compound selection.
- Installation in closed housings.
- Low compression set.
- Pressure relief grooves at the back of the seal ensure optimal function even in case of flow-controlled exhaust air.

Range of application

Working pressure	≤ 16 bar
Working temperature	-35 °C to +80 °C
Surface speed	≤ 1 m/s
Media	Oiled as well as oil-free compressed air (after initial lubrication during assembly).

Compounds

Standard: P5007, PUR compound (≈ 82 Shore A)
for low temperatures: P5075, PUR compound (≈ 80 Shore A)

Installation

The profile E4 lip seals are simply pulled over the piston into the groove. To avoid damaging the seal lips during installation, sharp edges should be removed from the piston and the cylinder tube.
Under oil-free conditions it is important to obtain a solid lubrication film inside the cylinder tube. This must be achieved before assembly to ensure a long service life of the seal.
For piston guidance we recommend the profile F2 piston guidance tape. Please refer to our profile F2 for details of the piston outside diameter and the gap measurements.

In case of special operating conditions (specific pressure loads, temperature, speed, use in water, HFA, HFB fluids etc.), please contact our consultancy service for a selection of the material and design best suiting your particular application requirements.

KOVAZ.cz

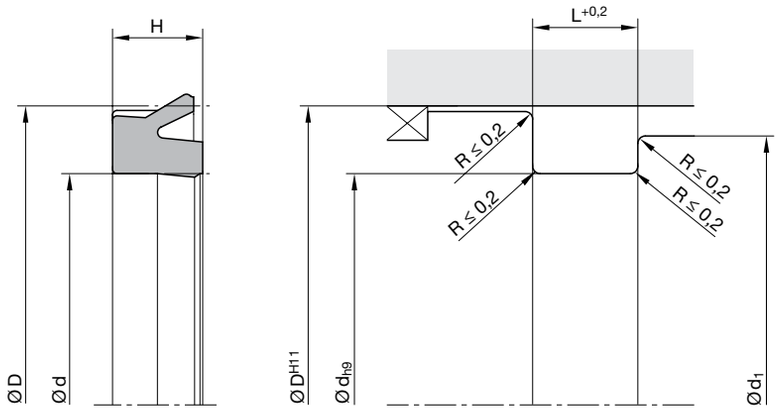

d_1 = minimum piston diameter on pressure side

For surface finish, lead in chamfer and other installation dimensions see “General installation guidelines”.

D	d	H	L	d_1	Order code
20.5	14	4	4.5	19.5	E4 2016 P5007
25	17	5.5	6	24	E4 2517 P5007
32	24	5.5	6	31	E4 3224 P5007
40	30	7	7.5	38.5	E4 4030 P5007
45	33	9	10	43	E4 4533 P5007
50	40	7	7.5	48.5	E4 5040 P5007
63	53	7	7.5	61.5	E4 6353 P5007
80	68	8.5	9.5	78	E4 8068 P5007
100	88	8.5	9.5	98	E4 A088 P5007
125	110	10	11	122.5	E4 C010 P5007
160	140	14	15	155	E4 G014 P5007
160	145	10	11	157.5	E4 G022 P5007
200	180	14	15	195	E4 L018 P5007
320	295	17	18	312.5	E4 Q206 P5007

Further sizes on request.

KOVAZ.CZ

The profile Z7 pneumatic piston seal is a U-ring with an integral guiding surface for single-acting pistons.

- Due to application-optimized geometry and compounds suitable for use in oiled as well as in oil-free air (after initial lubrication on assembly).
- Multi-functional sealing element. The guiding area at the sealing element performs the guiding function in the cylinder. However, due to its geometry the sealing element is not suitable for absorption of high radial forces or long strokes.
- Prevents metallic contact between the piston and cylinder. Ideal for light-metal and plastic cylinders (ridging).
- Good wear resistance.
- Smooth running due to optimum lubricant-retaining sealing lip geometry.
- Easier installation.
- Assembly on one-part piston is possible.
- High temperature resistance in case of suitable compound selection.
- Excellent media resistance in case of suitable compound selection.
- Installation in open housings with retaining collar.

Range of application

Working pressure	≤ 16 bar
Working temperature	-30 °C to +80 °C
Surface speed	≤ 1 m/s
Media	Oiled as well as oil-free compressed air (after initial lubrication during assembly).

Compounds

Standard: N3578, NBR Compound (≈ 75 Shore A)
for low temperatures: N8602, NBR Compound (≈ 70 Shore A)
for high temperatures: V3681, FKM Compound (≈ 80 Shore A)

Installation

The profile Z7 pneumatic cylinder seals can be easily mounted by pulling them over the one-piece piston.
Care should be taken that all edges are chamfered to avoid seal damage.

In case of special operating conditions (specific pressure loads, temperature, speed, use in water, HFA, HFB fluids etc.), please contact our consultancy service for a selection of the material and design best suiting your particular application requirements.

KOVAZ.cz

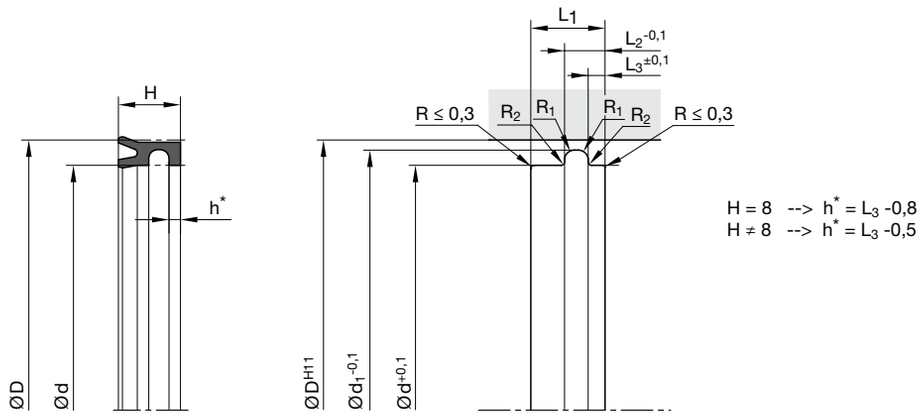

For surface finish, lead in chamfer and other installation dimensions see “General installation guidelines”.

D	d	H	d_1	L_1	L_2	L_3	R_1	R_2	Order code
16	10	8	13.5	9.5	3	2	0.9	0.2	Z7 1610 N3578
18	12	8	15.5	9.5	3	2	0.9	0.2	Z7 1812 N3578
20	14	8	17.5	9.5	3	2	0.9	0.2	Z7 2014 N3578
25	18	9	22.5	9.5	3	2	1.3	0.2	Z7 2518 N3578
28	22	8	25.5	9.5	3	2	1.3	0.2	Z7 2822 N3578
30	23	9	27.5	10	3	2	1.3	0.2	Z7 3023 N3578
32	25	9	29.5	10	3	2	1.3	0.2	Z7 3225 N3578
35	28	9	32.5	10	3	2	1.3	0.2	Z7 3528 N3578
40	33	9	37.5	10	3	2	1.3	0.2	Z7 4033 N3578
45	38	9	42.5	10	3	2	1.3	0.2	Z7 4538 N3578
50	43	9	47.5	10	3	2	1.3	0.2	Z7 5043 N3578
54	46	10	51.5	11	4	2	1.3	0.2	Z7 5446 N3578
63	53	13	60	14.5	5	2.5	1.6	0.3	Z7 6353 N3578
63	56	9	60.5	10	3	2	1.3	0.3	Z7 6356 N3578
70	62	10	67.5	11	4	2	1.6	0.3	Z7 7007 N3578
80	72	10	77.4	11	4	2	1.6	0.3	Z7 8067 N3578
80	70	14	77	15.5	6	2.5	1.6	0.3	Z7 8070 N3578
100	88	16.5	96.5	18	8	2.5	1.6	0.4	Z7 A088 N3578
100	90	12	97	13.5	4	2.5	1.6	0.3	Z7 A089 N3578

Further sizes on request.

Z8 (NBR)

The profile Z8 cylinder seal is a single-acting lip seal for pistons in pneumatic cylinders and valves. It requires small housing dimensions. The standard series of profile Z8 conforms to the cylinder diameters of ISO 3320 and CETOP RP 52 P, RP 43 P and RP 53 P.

- Due to application-optimized geometry and compounds suitable for use in oiled as well as in oil-free air (after initial lubrication on assembly).
- Good sealing performance in extremely small assembly conditions.
- Good wear resistance.
- Low static and dynamic friction thanks to miniaturized design.
- Smooth running due to optimum lubricant-retaining sealing lip geometry.
- Easier installation.
- High temperature resistance in case of suitable compound selection.
- Excellent media resistance in case of suitable compound selection.
- Installation in closed and undercut housings.

Range of application

Working pressure	≤ 16 bar
Working temperature	-20 °C to +80 °C
Surface speed	≤ 1 m/s
Media	Oiled as well as oil-free compressed air (after initial lubrication during assembly).

Compounds

Standard: N3580, a special NBR-based SFR® elastomer (≈ 80 Shore A). This compound offers excellent running properties, especially in the semi-frictional area.
for low temperatures: N8602, NBR compound (≈ 70 Shore A)
for high temperatures: V8550, FKM compound (≈ 80 Shore A)

Installation

Profile Z8 piston seals can be easily mounted into the grooves by simply pulling them over the piston. To avoid damaging the seals sharp edges should be removed from the piston and the cylinder tube.
For oil-frei operating conditions, it is important to obtain a full lubrication film inside the cylinder tube before assembly to ensure long service life of the seal.
For piston guidance we recommend our profile F2 piston guidance tape. For dimensions of pistons and clearances, please refer to our profile F2.

In case of special operating conditions (specific pressure loads, temperature, speed, use in water, HFA, HFB fluids etc.), please contact our consultancy service for a selection of the material and design best suiting your particular application requirements.

KOVAZ.cz

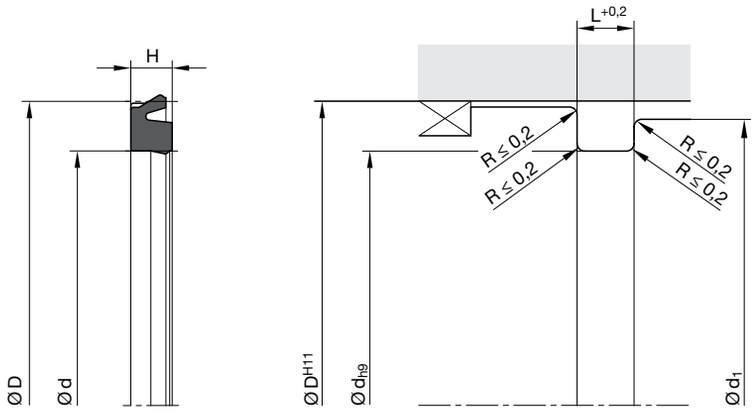

d_1 = minimum piston diameter on pressure side

For surface finish, lead in chamfer and other installation dimensions see “General installation guidelines”.

D	d	H	L	d_1	Order code
4	1.5	1.5	2	3.6	Z8 0415 N3580
5	2.5	1.5	2	4.6	Z8 0504 N3580
6	3	2	2.5	5.6	Z8 0630 N3580
7.5	4.9	2	2.5	7.1	Z8 0750 N3580
8	4	2.55	3	7.6	Z8 0804 N3580
8	4.8	2.3	2.7	7.6	Z8 0806 N3580
8	5.45	2.3	2.8	7.6	Z8 0810 N3580
10	3	3.5	4	9.6	Z8 1003 N3580
10	6	2.55	3	9.6	Z8 1006 N3580
11	6	2.55	3	10.6	Z8 1106 N3580
12	7	2.55	3	11.6	Z8 1207 N3580
13	8	2.55	3	12.6	Z8 1030 N3580
14	8	2.55	3	13.6	Z8 1421 N3580
15	9	2.55	3	14.6	Z8 1509 N3580
16	10	2.55	3	15.6	Z8 1610 N3580
16	11	2.55	3	15.6	Z8 1611 N3580
18	12	2.55	3	17.6	Z8 1812 N3580
20	14	2.55	3	19.6	Z8 2014 N3580
21	15	2.55	3	20.4	Z8 2115 N3580
22	16	2.55	3	21.4	Z8 2216 N3580
24	18	3.25	3.5	23.4	Z8 2418 N3580
25	19	3.25	3.5	24.4	Z8 2519 N3580
28	22	3.25	3.5	27.4	Z8 2822 N3580
30	22	3.25	3.5	29.4	Z8 3022 N3580
30	22.5	4.8	5.2	29.4	Z8 3023 N3580
32	24	3.25	3.5	31.4	Z8 3224 N3580
35	27	3.25	3.5	34.4	Z8 3527 N3580
36	28	3.25	3.5	35.4	Z8 3628 N3580
37	29	3.25	3.5	36.4	Z8 3729 N3580
38	30	3.25	3.5	37.4	Z8 3818 N3580
40	32	3.25	3.5	39.4	Z8 4032 N3580
42	34	3.25	3.5	41.4	Z8 4234 N3580
45	37	3.25	3.5	44.4	Z8 4522 N3580
50	42	3.25	3.5	49.4	Z8 5042 N3580

D	d	H	L	d_1	Order code
52	42	4.25	4.5	51.4	Z8 5205 N3580
57	50.5	3.25	3.5	56.4	Z8 5705 N3580
58	48	4.25	4.5	57.4	Z8 5816 N3580
63	53	4.25	4.5	62.4	Z8 6353 N3580
80	70	4.25	4.5	79.4	Z8 8070 N3580
90	80	4.25	4.5	89.4	Z8 9080 N3580
100	90	4.25	4.5	99.4	Z8 A090 N3580
125	105	8.25	8.5	123.8	Z8 C505 N3580
150	130	8.25	8.5	148.8	Z8 F113 N3580
160	140	8.25	8.5	158.8	Z8 G014 N3580
200	180	8.25	8.5	198.8	Z8 L018 N3580

Further sizes on request.

Z8 (PUR)

The profile Z8 cylinder seal is a single-acting lip seal for pistons in pneumatic cylinders and valves. It requires small housing dimensions. The standard series of profile Z8 conforms to the cylinder diameters of ISO 3320 and CETOP RP 52 P, RP 43 P and RP 53 P.

- Due to application-optimized geometry and compounds suitable for use in oiled as well as in oil-free air (after initial lubrication on assembly).
- Good sealing performance in extremely small assembly conditions.
- Extreme wear resistance.
- Low static and dynamic friction thanks to miniaturized design.
- Smooth running due to optimum lubricant-retaining sealing lip geometry.
- Easier installation.
- Excellent media resistance in case of suitable compound selection.
- Installation in closed and undercut housings.
- Low compression set.

Range of application

Working pressure	≤ 16 bar
Working temperature	-35 °C to +80 °C
Surface speed	≤ 1 m/s
Media	Oiled as well as oil-free compressed air (after initial lubrication during assembly).

Compounds

Standard: P5007, PUR compound (≈ 82 Shore A)
for low temperatures: P5075, PUR compound (≈ 80 Shore A)

Installation

Profile Z8 piston seals can be easily mounted into the grooves by simply pulling them over the piston. To avoid damaging the seals sharp edges should be removed from the piston and the cylinder tube.
For oil-free operating conditions, it is important to obtain a full lubrication film inside the cylinder tube before assembly to ensure long service life of the seal.
For piston guidance we recommend our profile F2 piston guidance tape. For dimensions of pistons and clearances, please refer to our profile F2.

In case of special operating conditions (specific pressure loads, temperature, speed, use in water, HFA, HFB fluids etc.), please contact our consultancy service for a selection of the material and design best suiting your particular application requirements.

KOVAZ.cz

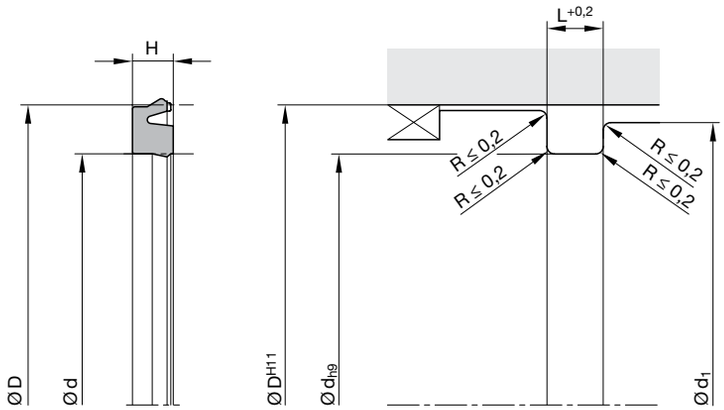

d_1 = minimum piston diameter on pressure side

For surface finish, lead in chamfer and other installation dimensions see “General installation guidelines”.

D	d	H	L	d_1	Order code
8	4	2.55	3	7.6	Z8 0804 P5007
8	4.8	2.55	3	7.6	Z8 0807 P5007
10	6	2.55	3	9.6	Z8 1006 P5007
12	7	2.55	3	11.6	Z8 1207 P5007
12.6	7.5	2.55	3	12.2	Z8 1260 P5007
16	10	2.55	3	15.6	Z8 1610 P5007
20	14	2.55	3	19.6	Z8 2014 P5007
25	19	3.25	3.5	24.4	Z8 2519 P5007
25	19	4	4.5	24.4	Z8 2520 P5007
28	22	3.25	3.5	27.4	Z8 2822 P5007
30	21	2.75	3.2	29.4	Z8 3021 P5007
32	24	3.25	3.5	31.4	Z8 3224 P5007
40	32	3.25	3.5	39.4	Z8 4032 P5007
50	42	3.25	3.5	49.4	Z8 5042 P5007
63	53	4.25	4.5	62.4	Z8 6353 P5007
80	70	4.25	4.5	79.4	Z8 8070 P5007
100	90	4.25	4.5	99.4	Z8 A090 P5007
125	105	8.25	8.5	123.8	Z8 C505 P5007
160	140	8.25	8.5	158.8	Z8 G014 P5007
200	180	8.25	8.5	198.8	Z8 L018 P5007

Further sizes on request.

KOMAZ.CZ

The profile C2 piston seal meets the requirements of the manufacturers of hydraulic and pneumatic equipment for seals with the smallest possible housings. Although cross-sections and heights are very small the sealing performance is excellent.

Extremely low friction is experienced because of the short contact to the sealing surface area. Because of the special design, back-up rings or brackets are not required.

Use in pneumatic equipment is only possible when consistent supply of lubricant such as oiled air is assured. For installation in non-lubricated pneumatic systems (dry air) we recommend our profile E4 which fits into the same housings.

- Good wear resistance.
- Easier installation.
- Suitable for fully automatic installation
- Assembly on one-part piston is possible.
- High temperature resistance in case of suitable compound selection.
- Excellent media resistance in case of suitable compound selection.
- Suitable compounds available for special requirements of the chemical process industry.
- Suitable compounds available for special requirements of the food processing industry.
- Installation in closed and undercut housings.

Range of application

Especially recommended for pistons in hydraulic and pneumatic cylinders.

Working pressure [1]	
Hydraulics	≤ 160 bar
Pneumatics	≤ 16 bar
Working temperature	
Hydraulics	-25 °C to +100 °C
Pneumatics	-25 °C to +80 °C
Surface speed	≤ 0.5 m/s

[1] Dependent upon cross-section and compound.

Compounds

Standard: N3584, NBR compound (≈ 85 Shore A)
for low temperatures: N8613, NBR compound (≈ 80 Shore A)
for high temperatures: V3664, FKM compound (≈ 85 Shore A)

Installation

The profile C2 piston seals are manufactured undersized in relation to the nominal dimensions. Only after installation will the sealing lip diameter have the desired dimensions. This lip seal may easily be snapped into the grooves. Care should be taken that the seals are not pulled over sharp edges.
In the case of double-acting pistons, pressure peaks should be avoided. In such cases, sealing elements with larger cross-sections or other profiles with header rings should be used.

In case of special operating conditions (specific pressure loads, temperature, speed, use in water, HFA, HFB fluids etc.), please contact our consultancy service for a selection of the material and design best suiting your particular application requirements.

KOVAZ.cz

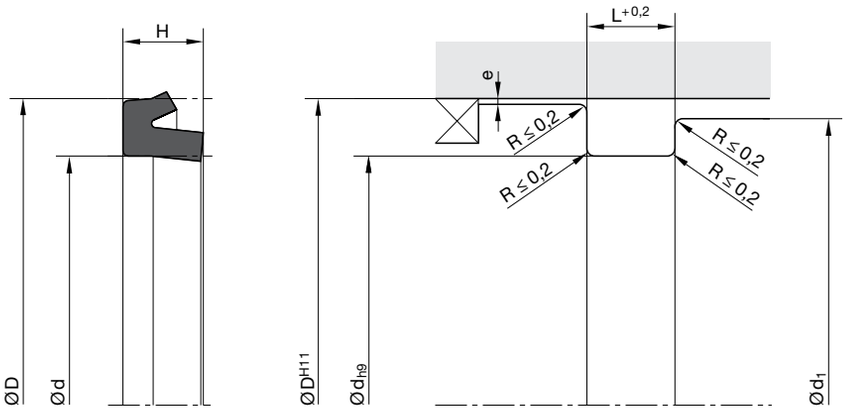

"e" see chapter "Maximum gap allowance"
d_1 = minimum piston diameter on pressure side

For surface finish, lead in chamfer and other installation dimensions see "General installation guidelines".

D	d	H	L	d_1	Order code
4	1.5	1.7	2	3	C2 0010 N3584
5	2	2.2	2.5	4	C2 0014 N3584
6	2.5	2	2.3	4.5	C2 0023 N3584
6	3	3	3.5	5	C2 0025 N3584
7.5	4	2	2.3	6	C2 0033 N3584
8	3	3.5	4	5.5	C2 0035 N3584
8	5	4	4.5	7	C2 0045 N3584
9.5	4.5	3.5	4	7	C2 0065 N3584
10	3	4	4.5	6.5	C2 1010 N3584
10	5	3.5	4	7.5	C2 1020 N3584
10	6	4.2	4.7	8	C2 1029 N3584
11	6	4	4.5	8.5	C2 1035 N3584
12	6	4	4.5	9	C2 1040 N3584
12	8	3	3.5	10	C2 1045 N3584
13	7	4	4.5	10	C2 1055 N3584
13.5	8	4	4.5	11	C2 1058 N3584
14	6	5.5	6	10	C2 1063 N3584
14	8	4	4.5	11	C2 1066 N3584
15	7	5.5	6	11	C2 1070 N3584
16	8	5.5	6	12	C2 1080 N3584
16	10	4	4.5	13	C2 1083 N3584
16	10	6	6.5	13	C2 1086 N3584
17.5	11.7	3	3.5	14.8	C2 1088 N3584
18	10	5	5.5	14	C2 1091 N3571
18	10	5.5	6	14	C2 1092 N3584
18	12	4.2	4.7	15	C2 1093 N3584
19.05	10.5	5.5	6	15	C2 1097 N3584
20	10	7	7.5	15	C2 2005 N3584
20	12	5.5	6	16	C2 2010 N3584
20	14	4.2	4.7	17	C2 2012 N3584
22	14	5.5	6	18	C2 2020 N3584
24	16	5.5	6	20	C2 2030 N3584
25	17	5.5	6	21	C2 2040 N3584
26	18	5.5	6	22	C2 2050 N3584

D	d	H	L	d_1	Order code
28	18	8	8.5	23	C2 2060 N3584
28	20	5.5	6	24	C2 2065 N3584
30	18	8	8.5	24	C2 3010 N3584
30	20	7	7.5	25	C2 3015 N3584
30	22	5.5	6	26	C2 3018 N3584
32	22	5	5.5	27	C2 3025 N3584
32	22	7	7.5	27	C2 3030 N3584
32	24	5.5	6	28	C2 3035 N3584
35	25	7	7.5	30	C2 3050 N3584
36	26	7	7.5	31	C2 3055 N3584
37	21	12	13	29	C2 3060 N3584
37	29	5.5	6	33	C2 3063 N3584
38	28	7	7.5	33	C2 3065 N3584
39.69	26.99	6.35	6.85	33.5	C2 3093 N3584
40	30	7	7.5	35	C2 4005 N3584
40	32	5.5	6	36	C2 4010 N3584
45	35	7	7.5	40	C2 4035 N3584
45	37	6	6.5	41	C2 4047 N3584
46	36	7	7.5	41	C2 4045 N3584
48	40	5.5	6	44	C2 4065 N3584
50	36	10	11	43	C2 5005 N3584
50	40	7	7.5	45	C2 5010 N3584
50	42	8	8.5	46	C2 5012 N3584
50.8	41.28	7.93	8.43	51	C2 5016 N3584
52	36	12	13	44	C2 5020 N3584
52	42	7	7.5	48	C2 5025 N3584
55	45	7	7.5	50	C2 5045 N3584
60	40	12	13	50	C2 6005 N3584
60	50	7	7.5	55	C2 6010 N3584
60	50	10	11	55	C2 6011 N3584
62	46	12	13	52	C2 6020 N3584
62	47	10	11	51.5	C2 6023 N3584
62	52	7	7.5	57	C2 6028 N3584
63	45	12	13	54	C2 6040 N3584

Further sizes on request.

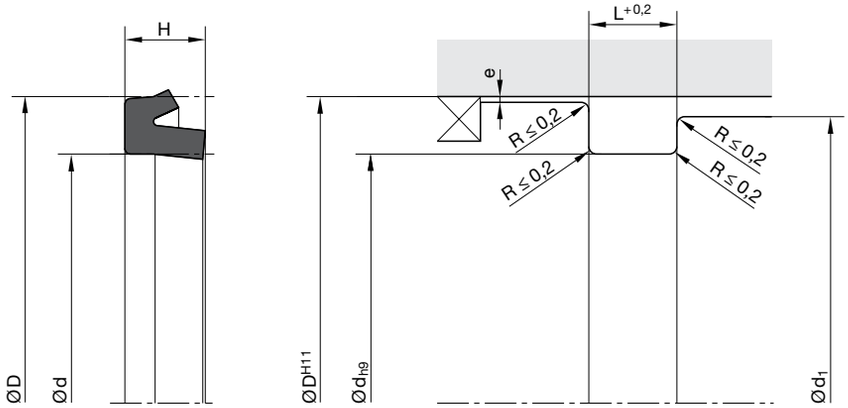

"e" see chapter "Maximum gap allowance"
d_1 = minimum piston diameter on pressure side

For surface finish, lead in chamfer and other installation dimensions see "General installation guidelines".

D	d	H	L	d_1	Order code
63	53	7	7.5	58	C2 6035 N3584
65	49	12	13	57	C2 6045 N3584
65	53	10	11	59	C2 6050 N3584
65	55	7	7.5	60	C2 6055 N3584
67	57	7	7.5	62	C2 6063 N3584
68	58	7	7.5	63	C2 6070 N3584
70	50	14	15	60	C2 7005 N3584
70	54	12	13	62	C2 7010 N3584
70	58	8.5	9.5	64	C2 7020 N3584
74	62	8.5	9.5	68	C2 7035 N3584
75	55	12	13	65	C2 7045 N3584
75	59	12	13	67	C2 7047 N3584
75	63	8.5	9.5	69	C2 7050 N3584
80	60	14	15	70	C2 8005 N3584
80	63	16	17	71.5	C2 8008 N3584
80	64	8	8.5	72	C2 8011 N3584
80	68	8.5	9.5	74	C2 8015 N3584
85	73	8.5	9.5	79	C2 8045 N3584
90	70	12	13	80	C2 9015 N3584
90	78	8.5	9.5	84	C2 9025 N3584
98.43	85.73	9.52	10.32	92	C2 9085 N3584
100	80	15	16	90	C2 A010 N3584
100	85	9.5	10.5	92.5	C2 A014 N3584
100	85	12	13	92.5	C2 A015 N3584
100	88	8.5	9.5	94	C2 A020 N3584
100	90	7	7.5	95	C2 A025 N3584
105	85	15	16	95	C2 A040 N3584
110	95	10	11	102.5	C2 B010 N3584
115	95	14	15	105	C2 B015 N3584
120	100	15	16	110	C2 C015 N3584
120	105	10	11	112.5	C2 C017 N3584
125	105	16	17	115	C2 C024 N3584
125	110	10	11	117.5	C2 C025 N3584
130	115	10	11	122.5	C2 D010 N3584

D	d	H	L	d_1	Order code
135	115	14	15	125	C2 D020 N3584
136	116	14	15	126	C2 D025 N3584
140	115	18	19	127.5	C2 E010 N3584
140	120	14	15	130	C2 E015 N3584
140	125	10	11	132.5	C2 E020 N3584
145	130	10	11	137.5	C2 E040 N3584
150	135	10	11	142.5	C2 F015 N3584
155	130	18	19	142.5	C2 F025 N3584
155	135	15	16	145	C2 F030 N3582
160	130	25	26	145	C2 G011 N3584
160	140	14	15	150	C2 G015 N3584
160	145	10	11	152.5	C2 G020 N3584
175	145	18	19	160	C2 H010 N3584
175	155	14	15	165	C2 H020 N3584
180	160	14	15	170	C2 J015 N3584
190	170	14	15	180	C2 K015 N3584
200	180	14	15	190	C2 L015 N3584
220	200	14	15	210	C2 M015 N3584
225	200	17.5	18.5	212.5	C2 M025 N3584
240	220	14	15	230	C2 N015 N3584
250	230	14	15	240	C2 N030 N3584
260	240	14	15	250	C2 O015 N3584
270	250	14	15	260	C2 O070 N3510
280	260	14	15	270	C2 P015 N3584
295	275	14	15	285	C2 P095 N3510
300	280	15	16	290	C2 Q010 N3584
315	290	17	18	302.5	C2 Q020 N3584
350	320	21	22	335	C2 Q030 N3584
360	340	14	15	350	C2 Q060 N3584

Further sizes on request.

The PDF Ultrathan® piston seal profile MK is a sealing element with integrated guiding and cushioning buffers. This seal-guide element can be used both on pistons with or without a permanent magnet. When used in magnetic pistons, the seal-guide element encapsulates the permanent magnet.

- The asymmetrical retention groove ensures optimum positive connection between the sealing element and the piston.
- Cushioning buffers on the piston´s front faces with integrated ventilation ducts provide for mechanical cushioning of the cylinders.
- Multi-functional sealing element. The guiding area at the sealing element performs the guiding function in the cylinder. However, due to its geometry the sealing element is not suitable for absorption of high radial forces or long strokes.
- Multi-functional element: seal, guiding and cushioning element.
- Optimal front-side sealing effect due to favourable cushioning buffer geometry.
- Prevents metallic contact between the piston and cylinder. Ideal for light-metal and plastic cylinders (ridging).
- Long service life thanks to application-optimized compounds.
- Easier installation.
- Assembly on one-part piston is possible.
- Excellent media resistance in case of suitable compound selection.
- Low compression set.

Range of application

Working pressure	≤ 12 bar
Working temperature	-30 °C to +80 °C
Surface speed	≤ 1 m/s
Media	Oiled as well as oil-free compressed air (after initial lubrication during assembly).

Compounds

Standard: P5010, PUR Compound (≈ 90 Shore A)
for low temperatures: P5075, PUR Compound (≈ 80 Shore A)
for high temperatures: V3664, FKM Compound (≈ 85 Shore A)

Installation

The MK piston seal features easy snap-on assembly with the retention groove for 12 to 25 mm diameters being machined into the piston rod. In order to prevent damage to the sealing lips during assembly, it is necessary to break sharp edges at the piston and cylinder. Under dry operating conditions, it is imperative to apply a continuous full-surface lubricating film inside the cylinder for achieving long service life. Because the seal itself also serves as a guide, additional guidance is not required.

In case of special operating conditions (specific pressure loads, temperature, speed, use in water, HFA, HFB fluids etc.), please contact our consultancy service for a selection of the material and design best suiting your particular application requirements.

KOVAZ.cz

Typ 1: D < 32 mm

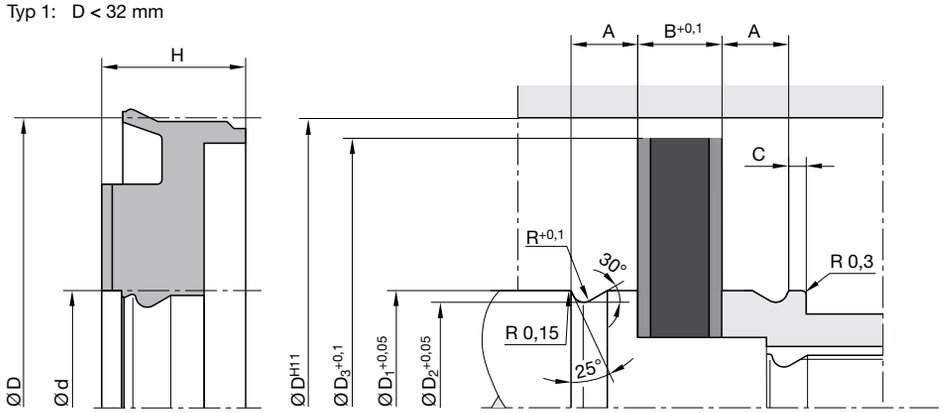

Typ 2: D ≥ 32 mm

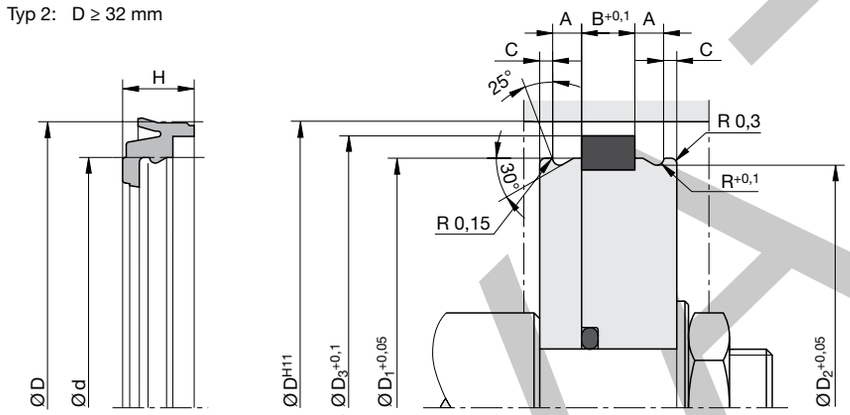

For surface finish, lead in chamfer and other installation dimensions see “General installation guidelines”.

D	d	H	D_1	D_2	D_3	A	B	C	R	Order code
Type 1: D < 32 mm										
12	6	5.9	6	5	10.4	2.5	3.65	0.6	0.5	MK 1206 P5010
16	8	5.9	8	7	14.4	3.25	2.65	0.65	0.5	MK 1608 P5010
20	10	5.9	10	9	18	2.85	3.65	0.55	0.5	MK 2010 P5010
25	10	6.15	10	9	23	2.85	3.65	0.75	0.5	MK 2510 P5010
Type 2: D ≥ 32 mm										
32	25	7.15	25.05	23.8	29.2	2.3	4.4	0.9	0.6	MK 3225 P5010
40	33	7.65	33.05	31.8	36.8	2.6	4.8	0.9	0.6	MK 4033 P5010
50	43	7.65	43.05	41.8	46.9	2.6	4.8	0.9	0.6	MK 5043 P5010
63	53	9.9	53.05	51.4	59.8	4.1	5.3	1.4	0.8	MK 6353 P5010
80	70	10.9	70.05	68	76.8	3.7	6.1	1.9	1	MK 8070 P5010
100	90	13.15	90.05	88	96.8	4.75	6	2.65	1	MK A090 P5010

Further sizes on request.

IVAZ.CZ

The profile Z5 pneumatic piston seal is a double U-ring with an integral guiding surface for double-acting pistons.

- Due to application-optimized geometry and compounds suitable for use in oiled as well as in oil-free air (after initial lubrication on assembly).
- Multi-functional sealing element. The guiding area at the sealing element performs the guiding function in the cylinder. However, due to its geometry the sealing element is not suitable for absorption of high radial forces or long strokes.
- Prevents metallic contact between the piston and cylinder. Ideal for light-metal and plastic cylinders (ridging).
- Good wear resistance.
- Smooth running due to optimum lubricant-retaining sealing lip geometry.
- Easier installation.
- Assembly on one-part piston is possible.
- High temperature resistance in case of suitable compound selection.
- Excellent media resistance in case of suitable compound selection.
- Installation in open housings with retaining collar.

Range of application

Working pressure	≤ 16 bar
Working temperature	-30 °C to +80 °C
Surface speed	≤ 1 m/s
Media	Oiled as well as oil-free compressed air (after initial lubrication during assembly).

Compounds

Standard: N3578, NBR compound (≈ 75 Shore A)
or low temperatures: N8602, NBR compound (≈ 70 Shore A)
for high temperatures: V8550, FKM compound (≈ 80 Shore A)

Installation

The profile Z5 pneumatic cylinder seals can be easily mounted by pulling them over the one-piece piston.
Care should be taken that all edges are chamfered to avoid seal damage.

In case of special operating conditions (specific pressure loads, temperature, speed, use in water, HFA, HFB fluids etc.), please contact our consultancy service for a selection of the material and design best suiting your particular application requirements.

KOVAZ.cz

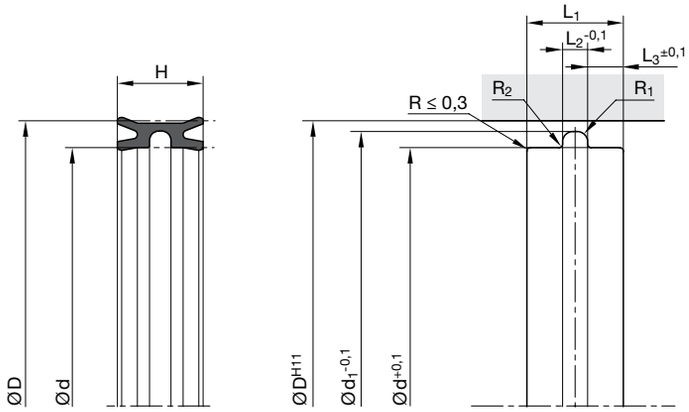

For surface finish, lead in chamfer and other installation dimensions see “General installation guidelines”.

D	d	H	d_1	L_1	L_2	L_3	R_1	R_2	Order code
16	10	10.5	13.5	12	3	4.5	0.9	0.2	Z5 1610 N3578
18	12	10.5	15.5	12	3	4.5	0.9	0.2	Z5 1812 N3578
20	14	10.5	17.5	12	3	4.5	0.9	0.2	Z5 2014 N3578
25	18	12	22.5	13	3	5	1.3	0.2	Z5 2518 N3578
28	22	10.5	25.5	12	3	4.5	0.9	0.2	Z5 2822 N3578
30	23	12	27.5	13	3	5	1.3	0.2	Z5 3023 N3578
32	25	12	29.5	13	3	5	1.3	0.2	Z5 3225 N3578
35	28	12	32.5	13	3	5	1.3	0.2	Z5 3528 N3578
40	33	12	37.5	13	3	5	1.3	0.2	Z5 4033 N3578
45	38	12	42.5	13	3	5	1.3	0.2	Z5 4538 N3578
50	43	12	47.5	13	3	5	1.3	0.2	Z5 5043 N3578
54	46	13	51.5	15	4	5.5	1.3	0.2	Z5 5446 N3578
63	53	17	60	19	5	7	1.6	0.3	Z5 6353 N3578
63	56	12	60.5	13	3	5	1.3	0.3	Z5 6356 N3578
70	62	13	67.5	15	4	5.5	1.6	0.3	Z5 7007 N3578
76	66	18	73	20	6	7	1.6	0.3	Z5 7666 N3578
80	72	13	77.4	15	4	5.5	1.6	0.3	Z5 8067 N3578
80	70	18	77	20	6	7	1.6	0.3	Z5 8070 N3578
100	88	21	96.5	23	8	7.5	1.6	0.4	Z5 A088 N3578
100	90	16	97	18	4	7	1.6	0.3	Z5 A089 N3578
125	113	15	122	17	5	6	1.6	0.4	Z5 C511 N3578
125	113	21	121.5	23	8	7.5	1.6	0.4	Z5 C513 N3578
130	120	17	127	19	5	7	1.6	0.3	Z5 D017 N3578
140	128	21	136.5	23	8	7.5	1.6	0.4	Z5 E028 N3578
150	140	17	147	19	5	7	1.6	0.3	Z5 F014 N3578
160	145	26	155.5	29	10	9.5	1.6	0.4	Z5 G045 N3578
200	185	26	195.5	29	10	9.5	1.6	0.4	Z5 L085 N3578

Further sizes on request.

The profile PZ pneumatic piston seal has been developed for use in pneumatic cylinders and in valves. The double-acting piston seal requires only small housing dimensions.

- Due to application-optimized geometry and compounds suitable for use in oiled as well as in oil-free air (after initial lubrication on assembly).
- Good sealing performance in extremely small assembly conditions.
- Can also be used for single-acting applications.
- Good wear resistance.
- Low static and dynamic friction thanks to miniaturized design.
- Smooth running due to optimum lubricant-retaining sealing lip geometry.
- Suitable for fully automatic installation
- Assembly on one-part piston is possible.
- High temperature resistance in case of suitable compound selection.
- Excellent media resistance in case of suitable compound selection.
- Short axial assembly length.
- Installation in closed housings.

Range of application

Working pressure	≤ 12 bar
Working temperature	-20 °C to +80 °C
Surface speed	≤ 1 m/s
Media	Oiled as well as oil-free compressed air (after initial lubrication during assembly).

Compounds

Standard: N3571, NBR compound (≈ 70 Shore A)
for low temperatures: N8602, NBR compound (≈ 70 Shore A)
for high temperatures: V3681, FKM compound (≈ 80 Shore A)

Installation

The profile PZ pneumatic piston seals can be easily mounted into the grooves by simply pulling them over the piston.
To avoid damaging the seal, sharp edges should be removed from the piston and the cylinder tube.
For oil-free conditions, it is important to obtain a full lubrication film inside the cylinder tube prior to assembly to ensure long service life of the seal.
For piston guidance, we recommend our profile F2 piston guidance tape. For dimensions of pistons and clearances, please refer to our profile F2.

In case of special operating conditions (specific pressure loads, temperature, speed, use in water, HFA, HFB fluids etc.), please contact our consultancy service for a selection of the material and design best suiting your particular application requirements.

KOVAZ.cz

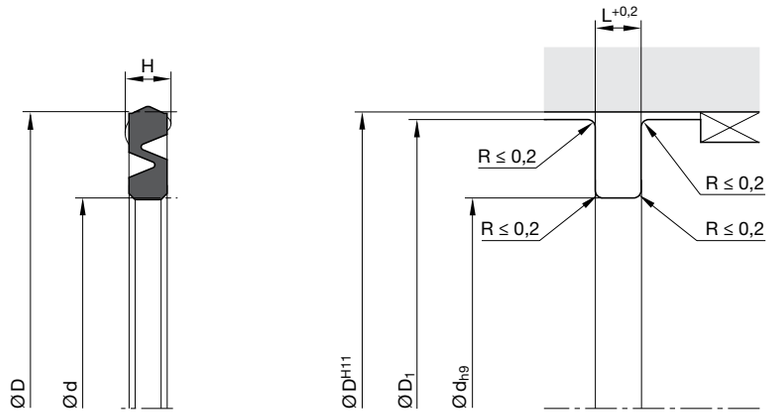

For surface finish, lead in chamfer and other installation dimensions see “General installation guidelines”.

D	d	H	L	D_1	Order code
10	6.5	1.4	1.8	9.6	PZ 1006 N3571
12	7	2	2.5	11.6	PZ 1207 N3571
16	9	2.1	2.5	15.6	PZ 1605 N3571
20	13	2.1	2.5	19.6	PZ 2013 N3571
25	18	2.1	2.5	24.6	PZ 2518 N3571
28	19	2.5	3	27.6	PZ 2819 N3571
30	21	2.5	3	29.6	PZ 3021 N3571
32	23	2.5	3	31.6	PZ 3210 N3571
35	26	2.5	3	34.5	PZ 3520 N3571
40	31	2.5	3	39.5	PZ 4031 N3571
45	36	2.5	3	44.5	PZ 4520 N3571
50	41	2.5	3	49.5	PZ 5010 N3571
63	51	3.4	4	62.5	PZ 6051 N3571
80	68	3.4	4	79.5	PZ 8010 N3571
100	88	3.4	4	99.4	PZ A008 N3571
125	110	4.4	5	124.4	PZ C050 N3571

Further sizes on request.

KOMAZ.CZ

The double-acting piston sealing set profile OA consists of a PTFE piston sealing ring and an elastomer O-ring as a preloading element.

Profile OA is particularly suitable for double-acting pneumatic pistons, e.g. in control cylinders, servo-assisted equipment and in quick-acting cylinders.

- Due to application-optimized geometry and compounds suitable for use in oiled as well as in oil-free air (after initial lubrication on assembly).
- Good sealing performance in extremely small assembly conditions.
- Can also be used for single-acting applications.
- Good wear resistance.
- Minimal break-away and dynamic friction and no stick-slip tendency ensures uniform motion even at low speeds.
- Good energy efficiency due to low friction.
- Very good emergency running properties in low-lube conditions.
- Assembly on one-part piston is possible.
- High temperature resistance assured by suitable O-ring compound selection.
- Adaptable to nearly all media thanks to high chemical resistance of the sealing ring and large O-ring compound selection.
- Short axial assembly length.
- Installation in closed and undercut housings.
- Available in diameters from 4 to 3000 mm.
- Machined small-volume series and samples available with short lead times.

Range of application

Piston sealing set for pneumatic applications.

Working pressure	≤ 16 bar
Working temperature	-30 °C to +80 °C [1)]
Surface speed	≤ 4 m/s

[1)] With deviation from standard temperature range, please contact our consultancy service for adequate o-ring compound.

Compounds

Sealing ring: Polon® 033, modified PTFE + 25 % carbon
O-ring: N0674, NBR elastomer with approx. 70 Shore A.

Installation

The grooves must be carefully cleaned and deburred. The cylinder bore must have a lead-in chamfer. When fitting the piston sealing ring there is always a risk that the ring may tilt and be sheared off by normal lead-in chamfers (see chapter “General installation guidelines for piston seals”, PTFE seals, fig. 1). We therefore recommend that up to a cylinder diameter of 230 mm a lead-in chamfer according to fig. 2 or detail “A” is considered. In the case of smaller rings which are especially liable to bending we recommend an open-groove design for diameters smaller than 30 mm.

This seal should only be used in combination with guiding elements (e.g. profile F2).

In case of special operating conditions (specific pressure loads, temperature, speed, use in water, HFA, HFB fluids etc.), please contact our consultancy service for a selection of the material and design best suiting your particular application requirements.

KOVAZ.cz

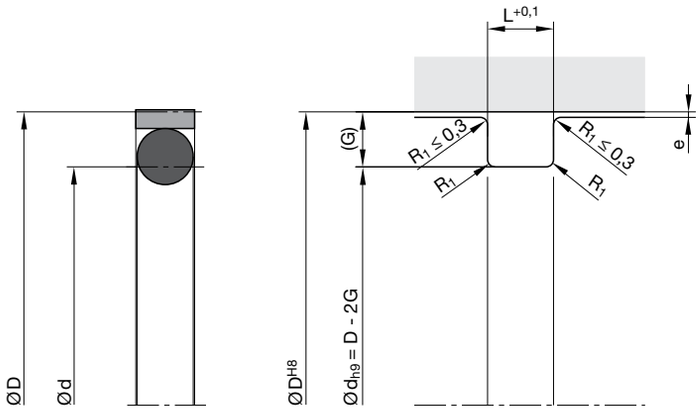

For surface finish, lead in chamfer and other installation dimensions see “General installation guidelines”.

Housing dimensions

Series no.	Cross-section	O-ring cross-section (mm)	Recommended piston Ø range D (mm) ≥	<	Groove width L (mm)	Groove depth G (mm)	Gap max. e (mm)	Radius max. R_1 (mm)
01800	A	1.78	7	16	2.00	2.00	0.20	0.5
01800	B	2.62	16	27	2.85	3.00	0.25	0.5
01800	C	3.53	27	50	3.80	3.75	0.25	0.5
01800	D	5.33	50	130	5.60	6.25	0.50	0.9
01800	E	6.99	130	180	7.55	7.50	0.50	0.9
01800	F	6.99	180	240	7.55	9.00	0.75	0.9
01800	G	6.99	240	420	7.55	12.00	1.00	0.9

Ordering example

Piston diameter 40 mm

OA 0400 033 01801 C (40.0 x 32.5 x 3.8)

OA	Profile			
0400	Piston diameter x 10			
033	Compound			
01801	Series no. / Compound code O-ring			
	01800	without O-ring		
	01801	N0674 (NBR)	70±5 Shore A	-30 / +110 °C
	01802	V0747 (FKM)	75±5 Shore A	-25 / +200 °C
	01803	N0304 (NBR)	75±5 Shore A	-50 / +110 °C
	01804	E0540 (EPDM)	80±5 Shore A	-40 / +150 °C
	01805	N3578 (NBR)	75±5 Shore A	-30 / +110 °C
	01806	N0552 (NBR)	90±5 Shore A	-30 / +100 °C
C	Cross-section			

Please note:
For certain applications, it might be convenient to use a non-standard cross-section -reduced or heavier. In these cases, please replace the standard cross-section code (in above example: “C”) by the one you require (for example “B” or “D”).

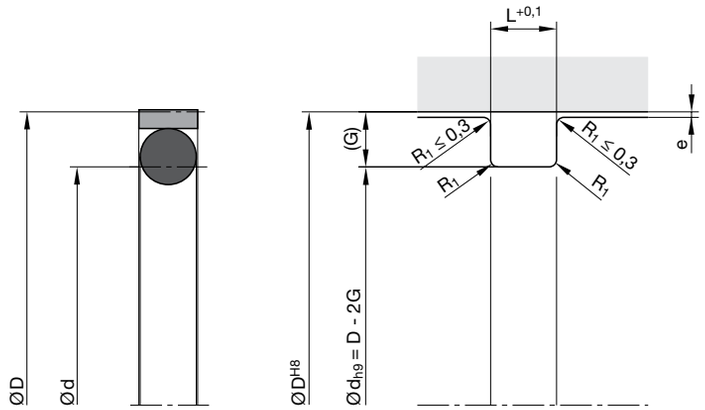

For surface finish, lead in chamfer and other installation dimensions see “General installation guidelines”.

Standard range

Size	Groove			O-ring		
	Ø D (mm)	Ø d (mm)	L (mm)	No.	CS (mm)	ID (mm)
0070	7	3	2	2-006	1.78	2.90
0080	8	4	2	2-007	1.78	3.68
0090	9	5	2	2-008	1.78	4.47
0100	10	6	2	2-010	1.78	6.07
0110	11	7	2	2-010	1.78	6.07
0120	12	8	2	2-011	1.78	7.65
0140	14	10	2	2-012	1.78	9.25
0160	16	10	2.85	2-110	2.62	9.19
0180	18	12	2.85	2-112	2.62	12.37
0190	19	13	2.85	2-112	2.62	12.37
0200	20	14	2.85	2-113	2.62	13.94
0220	22	16	2.85	2-114	2.62	15.54
0250	25	19	2.85	2-116	2.62	18.72
0280	28	20.5	3.8	2-211	3.53	20.22
0300	30	22.5	3.8	2-212	3.53	21.82
0320	32	24.5	3.8	2-214	3.53	24.99
0350	35	27.5	3.8	2-215	3.53	26.57
0360	36	28.5	3.8	2-216	3.53	28.17
0380	38	30.5	3.8	2-217	3.53	29.74
0400	40	32.5	3.8	2-219	3.53	32.92
0420	42	34.5	3.8	2-220	3.53	34.52
0450	45	37.5	3.8	2-221	3.53	37.69
0480	48	40.5	3.8	2-223	3.53	40.87
0500	50	37.5	5.6	2-325	5.33	37.47
0550	55	42.5	5.6	2-326	5.33	40.64
0600	60	47.5	5.6	2-328	5.33	46.99
0630	63	50.5	5.6	2-329	5.33	50.17
0650	65	52.5	5.6	2-329	5.33	50.17
0700	70	57.5	5.6	2-331	5.33	56.52
0740	74	61.5	5.6	2-332	5.33	59.69

Size	Groove			O-ring		
	Ø D (mm)	Ø d (mm)	L (mm)	No.	CS (mm)	ID (mm)
0750	75	62.5	5.6	2-333	5.33	62.87
0800	80	67.5	5.6	2-334	5.33	66.04
0850	85	72.5	5.6	2-336	5.33	72.39
0900	90	77.5	5.6	2-337	5.33	75.57
0920	92	79.5	5.6	2-338	5.33	78.74
1000	100	87.5	5.6	2-340	5.33	85.09
1050	105	92.5	5.6	2-342	5.33	91.44
1100	110	97.5	5.6	2-344	5.33	97.79
1150	115	102.5	5.6	2-345	5.33	100.97
1200	120	107.5	5.6	2-347	5.33	107.32
1250	125	112.5	5.6	2-348	5.33	110.49
1300	130	115	7.55	2-425	6.99	113.67
1400	140	125	7.55	2-428	6.99	123.19
1500	150	135	7.55	2-431	6.99	132.72
1600	160	145	7.55	2-435	6.99	142.24
2000	200	182	7.55	2-441	6.99	177.17
2200	220	202	7.55	2-444	6.99	196.22

Further sizes on request.

The single-acting profile EK is a complete pneumatic piston with a cup seal and a vulcanized metal disc support. It performs two functions:
Sealing and guiding.

- Due to application-optimized geometry and compounds suitable for use in oiled as well as in oil-free air (after initial lubrication on assembly).
- Immediate response (full pressure load) thanks to incorporated venting channels.
- Good wear resistance.
- Ideal corrosion protection thanks to complete elastomer covering.
- Smooth running due to optimum lubricant-retaining sealing lip geometry.
- Easy attachment to the piston rod without additional sealing elements.
- Easy installation due to integrated static sealing function.
- Excellent media resistance in case of suitable compound selection.
- Also available as double-acting version.
- Low assembly height of the complete piston enables short cylinder designs.
- Versatile complete piston for nearly all cylinder designs.

Range of application

Complete piston for single-acting pneumatic cylinders with and without cushioning, provided that no excessive lateral guidance loads will occur (long strokes and buckling).

Working pressure	≤ 16 bar
Working temperature	-30 °C to +80 °C
Surface speed	≤ 1 m/s
Media	Oiled as well as oil-free compressed air (after initial lubrication during assembly).

Compounds

Standard compound is an elastomer (NBR-based) with a hardness of approx. 71 Shore A and vulcanized to a metal disc, resp. 78 Shore A for diameters > 100 mm.

Installation

The profile EK complete piston is fixed to the piston rod with a locknut to avoid loosening. For use with dry and oil-free air, the piston and cylinder tube must be prelubricated with a suitable long-life lubricant.
It must be assured that the sealing lips do not touch the cylinder bottom and the cylinder cap at the limit stops (see also dimension "Ø d_m").

In case of special operating conditions (specific pressure loads, temperature, speed, use in water, HFA, HFB fluids etc.), please contact our consultancy service for a selection of the material and design best suiting your particular application requirements.

KOVAZ.CZ

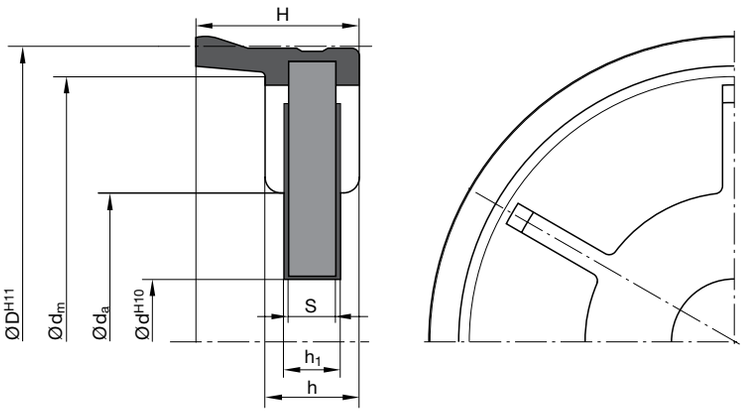

Ø d_m = max. Ø of joining metal parts

For surface finish, lead in chamfer and other installation dimensions see “General installation guidelines”.

D	d	H	S	h	d_a	h_1	d_m	Order code
25	8	7.9	3	6	16	3.6	21	EK 2508 Z5051
32	8	10.65	3	6.5	16	4	26.5	EK 3208 Z5051
40	10	12.4	4	7	22	4.6	34	EK 4009 Z5051
40	14	13.4	4	7	22	4	34	EK 4014 Z5051
50	10	12.8	4	7.8	25	4.6	43	EK 5010 Z5051
50	14	13.4	4	7	25	5	43	EK 5014 Z5051
50	16	14	4	7.5	25	5	43	EK 5016 Z5051
63	27	14.1	4	7	40	4.6	57	EK 6332 Z5051
80	12	15.2	5	8	55	5.6	70	EK 8013 Z5051
80	16	15.2	5	8	55	5.6	70	EK 8016 Z5051
80	27	15.35	5	8.5	55	6	72	EK 8027 Z5051
125	20	17.6	5	9.5	90	5.6	114	EK C520 Z5050
140	22	19.6	6	10.5	108	6.6	125	EK E022 Z5050
200	27	24.55	10	14.5	150	10.6	180	EK L027 Z5050

Further sizes on request.

KOVOMAT CZ

The single-acting profile DE is a complete pneumatic piston with a cup seal and a vulcanized metal disc support. It performs three functions:
Sealing, guiding and cushioning.

- Due to application-optimized geometry and compounds suitable for use in oiled as well as in oil-free air (after initial lubrication on assembly).
- Cushioning buffers on the piston´s front faces with integrated ventilation ducts provide for mechanical cushioning of the cylinders.
- Multi-functional element: seal, guiding and cushioning element.
- Immediate response (full pressure load) thanks to incorporated venting channels.
- Good wear resistance.
- Ideal corrosion protection thanks to complete elastomer covering.
- Smooth running due to optimum adjustment of the functional lips.
- Easy attachment to the piston rod without additional sealing elements.
- Easy installation due to integrated static sealing function.
- Excellent media resistance in case of suitable compound selection.
- Also available as double-acting version.
- Low assembly height of the complete piston enables short cylinder designs.
- Versatile complete piston for nearly all cylinder designs.

Range of application

Complete piston for single-acting pneumatic cylinders with end cushioning, provided that no excessive lateral guidance loads will occur (long strokes and buckling).

Working pressure	≤ 12 bar
Working temperature	-30 °C to +80 °C
Surface speed	≤ 1 m/s
Media	Oiled as well as oil-free compressed air (after initial lubrication during assembly).

Compounds

Standard compound is an elastomer (NBR-based) with a hardness of approx. 71 Shore A and vulcanized to a metal disc.

Installation

The profile DE complete piston is fixed to the piston rod with a locknut to avoid loosening. For use with dry and oil-free air, the piston and cylinder tube must be prelubricated with a suitable long-life lubricant.

In case of special operating conditions (specific pressure loads, temperature, speed, use in water, HFA, HFB fluids etc.), please contact our consultancy service for a selection of the material and design best suiting your particular application requirements.

KOVAZ.CZ

Complete piston with integrated cushioning

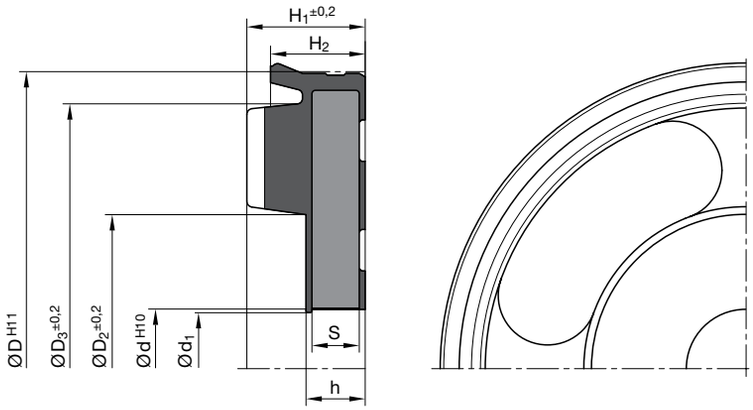

For surface finish, lead in chamfer and other installation dimensions see “General installation guidelines”.

D	d	H_1	H_2	S	h	D_2	D_3	Order code
6	2	2.8	2.3	1.25	1.45	3.2	5	DE 0602 Z5144*
8	3	3.7	3	1.5	1.8	4.2	6.3	DE 0803 Z5117
10	3	3.7	3	1.5	1.8	5.2	8	DE 1003 Z5117*
12	4.5	4.4	3.4	2	2.3	6.9	9.4	DE 1203 Z5117
16	4.5	4.4	3.4	2	2.3	6.9	13.2	DE 1603 Z5117
20	6	5.5	4.4	2.5	2.8	9.4	17	DE 2005 Z5117
25	7	6.4	5.4	3	3.5	10.8	21.2	DE 2506 Z5117
32	8	7.5	6	3	3.5	12.5	27	DE 3208 Z5117
40	8	8.5	7	4	4.5	17	34.9	DE 4008 Z5117
50	10	10	8	4	4.5	26	43.9	DE 5010 Z5117
63	12	10	8	4	4.5	26	56.6	DE 6312 Z5117
80	16	11.4	9.4	5	5.5	30	72	DE 8016 Z5117
100	20	12.9	10.9	6	6.5	35	91	DE A020 Z5117

* Moulds not available on the date of printing.
Further sizes on request.

KOVI.CZ

The double-acting profile DK is a complete pneumatic piston with a double cup seal and a vulcanized metal disc support. It performs two functions: **Sealing and guiding.**

- Due to application-optimized geometry and compounds suitable for use in oiled as well as in oil-free air (after initial lubrication on assembly).
- Immediate response (full pressure load) thanks to incorporated venting channels.
- Good wear resistance.
- Ideal corrosion protection thanks to complete elastomer covering.
- Smooth running due to optimum adjustment of the functional lips.
- Easy attachment to the piston rod without additional sealing elements.
- Easy installation due to integrated static sealing function.
- Excellent media resistance in case of suitable compound selection.
- Low assembly height of the complete piston enables short cylinder designs.
- Versatile complete piston for nearly all cylinder designs.

Range of application

Complete piston for double-acting pneumatic cylinders with and without cushioning, provided that no excessive lateral guidance loads will occur (long strokes and buckling).

Working pressure	≤ 16 bar
Working temperature	
DK NBR Z5051	-30 °C to +80 °C
DK PUR Z5071	-35 °C to +80 °C
Surface speed	≤ 1 m/s
Media	Oiled as well as oil-free compressed air (after initial lubrication during assembly).

Compounds

Standard compound is an elastomer (NBR-based) with a hardness of approx. 71 Shore A and vulcanized to a metal disc, resp. 78 Shore A for diameters > 100 mm.
For high and/or low temperature applications special compounds are available.
Available sizes in the polyurethane compound P5008 are listed separately.

Installation

The profile DK pneumatic complete piston is fixed to the piston rod with a locknut to avoid loosening. For use with dry and oil-free air, the piston and cylinder tube must be prelubricated with a suitable long-life lubricant.
It must be assured that the sealing lips do not touch the cylinder bottom and the cylinder cap at the limit stops (see also dimension "Ø d_m").

In case of special operating conditions (specific pressure loads, temperature, speed, use in water, HFA, HFB fluids etc.), please contact our consultancy service for a selection of the material and design best suiting your particular application requirements.

KOVAZ.cz

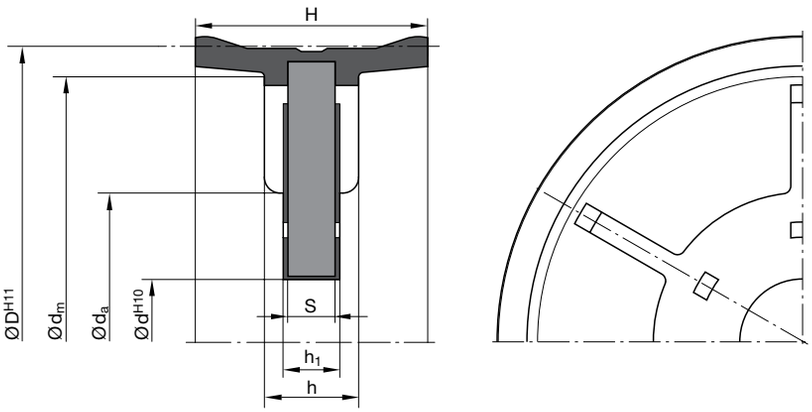

Ø d_m = max. Ø of joining metal parts

For surface finish, lead in chamfer and other installation dimensions see “General installation guidelines”.

D	d	H	S	h	d_a	h_1	d_m	Order code
DK NBR Z5051								
16	5	12	3	6	9	3.6	12	DK 1631 Z5051
20	5	12	3	6	10	3.6	16	DK 2030 Z5051
20	6	12	3	6	10	3.6	16	DK 2031 Z5051
25	6	12	3	6	13.5	3.6	21	DK 2506 Z5051
25	8	12	3	4	16	3.6	21	DK 2508 Z5051
25	8	12	3	6	16	3.6	21	DK 2509 Z5051
32	5	18	3	6	16	3.6	26.5	DK 3205 Z5051
32	6	15	3	6	16	3.6	26.5	DK 3206 Z5051
32	8	15	3	6	16	3.6	26.5	DK 3207 Z5051
32	8	15	3	6.5	16	4	26.5	DK 3210 Z5051
35	8	15	3	6	16	3.6	29.5	DK 3508 Z5051
40	8	18	4	7	22	4.6	34	DK 4007 Z5051
40	8	20	4	6.5	22	4.6	34	DK 4008 Z5051
40	10	18	4	7	22	4.6	34	DK 4009 Z5051
50	8	20	4	6.5	25	4.6	43	DK 5008 Z5051
50	10	18	4	7.8	25	4.6	43	DK 5010 Z5051
50	16	20.5	4	7	25	4.6	43	DK 5016 Z5051
60	12	21	4	6.5	37	4.6	52	DK 6012 Z5051
60	18	21	4	6.5	37	4.6	52	DK 6018 Z5051
63	12	22	5	8	40	5.6	55	DK 6312 Z5051
63	16	21.5	4	7	40	4.6	55	DK 6316 Z5051
70	12	22	5	8	44	5.6	62	DK 7012 Z5051
70	33	22	5	8	44	5.6	62	DK 7033 Z5051
80	12	22.5	5	8	55	5.6	70	DK 8013 Z5051
80	16	22.5	5	8	55	5.6	70	DK 8016 Z5051
80	20	22.5	5	8	55	5.6	70	DK 8020 Z5051
100	12	25	6	10	72	6.6	90	DK A012 Z5051
100	16	25	6	10	72	6.6	90	DK A016 Z5051
100	20	26	6	10	72	6.6	90	DK A019 Z5051
125	20	26	5	9.5	90	5.6	114	DK C520 Z5050
125	20	28	7	12	90	8.2	114	DK C522 Z5050
130	20	29	8	13	98	8.6	123	DK D020 Z5050
140	22	29	6	10.5	108	6.6	125	DK E022 Z5050

Further sizes on request.

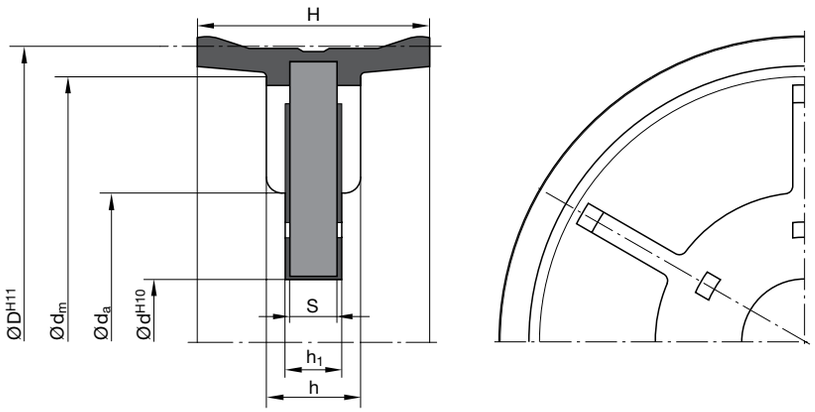

Ø d_m = max. Ø of joining metal parts

For surface finish, lead in chamfer and other installation dimensions see “General installation guidelines”.

D	d	H	S	h	d_a	h_1	d_m	Order code
150	20	29	10	13	100	10.6	143	DK F020 Z5050
160	27	29	6	10.5	110	6.6	145	DK G027 Z5050
160	30	29	6	10.5	110	6.6	145	DK G030 Z5050
200	27	35	10	14.5	150	10.6	180	DK L027 Z5050
200	30	35	10	13	150	10.6	180	DK L030 Z5050
250	30	40	12	15	180	12.6	240.6	DK N131 Z5050
250	30	40	15	18	180	15.6	240.6	DK N130 Z5050
DK PUR Z5071								
32	8	15	3	6	16	4.4	26.5	DK 3207 Z5071
40	10	18	4	7	22	5.4	34	DK 4009 Z5071
50	10	18	4	7.5	25	5.4	43	DK 5010 Z5071
63	16	21.5	4	7	40	5.4	55	DK 6316 Z5071
63.5	11.12	22	5	8	40.5	7	56	DK 6323 Z5071

Further sizes on request.

The double-acting profile DP is a complete pneumatic piston with a double cup seal and a vulcanized metal disc support. It performs three functions: **Sealing, guiding and cushioning.**

- Due to application-optimized geometry and compounds suitable for use in oiled as well as in oil-free air (after initial lubrication on assembly).
- Cushioning buffers on the piston´s front faces with integrated ventilation ducts provide for mechanical cushioning of the cylinders.
- Multi-functional element: seal, guiding and cushioning element.
- Immediate response (full pressure load) thanks to incorporated venting channels.
- Good wear resistance.
- Ideal corrosion protection thanks to complete elastomer covering.
- Smooth running due to optimum adjustment of the functional lips.
- Easy attachment to the piston rod without additional sealing elements.
- Easy installation due to integrated static sealing function.
- Excellent media resistance in case of suitable compound selection.
- Low assembly height of the complete piston enables short cylinder designs.
- Versatile complete piston for nearly all cylinder designs.

Range of application

Complete piston with end cushioning for double-acting pneumatic cylinders, provided that no excessive lateral guidance loads will occur (long strokes and buckling).

Working pressure	≤ 12 bar
Working temperature	-30 °C to +80 °C
Surface speed	≤ 1 m/s
Media	Oiled as well as oil-free compressed air (after initial lubrication during assembly).

Compounds

Standard compound is an NBR-based elastomer with a hardness of approx. 71 Shore A and vulcanized to a metal disc.

Installation

The profile DP pneumatic complete piston should be fixed to the piston rod with a locknut to avoid loosening. For use with dry and oil-free air, the piston and cylinder tube must be prelubricated with a suitable long-life lubricant.

In case of special operating conditions (specific pressure loads, temperature, speed, use in water, HFA, HFB fluids etc.), please contact our consultancy service for a selection of the material and design best suiting your particular application requirements.

KOVAZ.cz

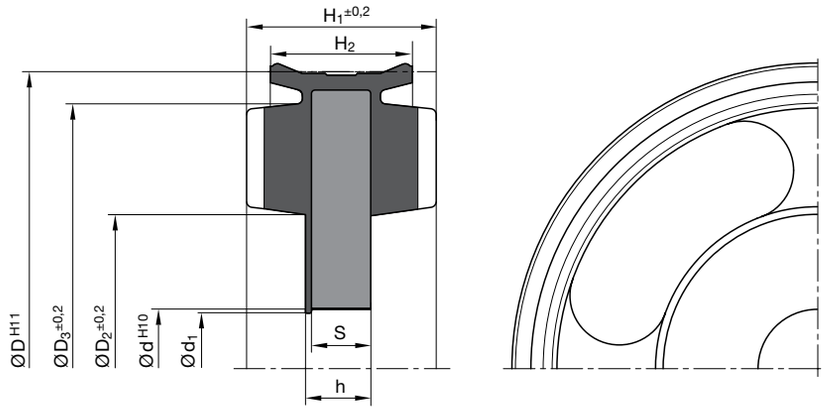

For surface finish, lead in chamfer and other installation dimensions see “General installation guidelines”.

D	d	H_1	H_2	S	h	D_2	D_3	Order code
6	2	3.8	3	1.25	1.45	3.2	5	DP 0602 Z5051
8	3	5	4	1.5	1.8	4.2	6.3	DP 0803 Z5051
10	3	5	4	1.5	1.8	5.2	8	DP 1003 Z5051
12	4.5	6	4	2	2.3	6.9	9.4	DP 1203 Z5051
12	4.5	6	5	2	2.3	6.9	10.2	DP 1204 Z5058
16	4.5	6.5	4.5	2	2.3	6.9	13.2	DP 1603 Z5051
16	4.5	6.5	5.5	2	2.4	6.9	13.9	DP 1604 Z5067
20	6	7.5	5.5	2.5	2.8	9.4	17	DP 2005 Z5051
20	6	7.5	6.3	2.5	2.9	8.8	17.3	DP 2006 Z5051
25	7	8.8	7	3	3.5	10.8	21.2	DP 2506 Z5051
25	7	8.8	7.6	3	3.5	10.8	22	DP 2507 Z5058
32	8	11	8	3	3.5	12.5	27	DP 3208 Z5051
40	8	11.8	8.8	4	4.5	17	34.9	DP 4008 Z5051
50	10	14	10	4	4.5	26	43.9	DP 5010 Z5051
63	12	14	10	4	4.5	26	56.6	DP 6312 Z5051
80	16	16	12	5	5.5	30	72	DP 8016 Z5051
100	20	18	14	6	6.5	35	91	DP A020 Z5051

Further sizes on request.

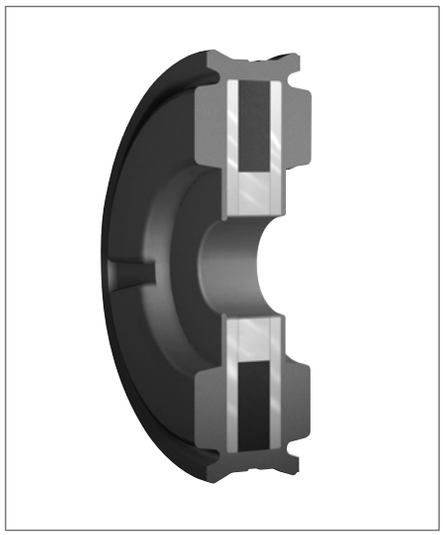

The double-acting pneumatic complete piston DR with inductive position interrogation and integrated cushioning is specifically designed to meet the requirements of modern pneumatic cylinders. The extremely slim complete piston is suitable for use in a wide range of different cylinder types and with various sensors.
The combination of all functionalities – **sealing, guiding, cushioning, interrogating** – in a single component assures easy assembly and, in addition, offers handling and logistic cost benefits.

- Due to application-optimized geometry and compounds suitable for use in oiled as well as in oil-free air (after initial lubrication on assembly).
- Use of different types of sensors (inductive) is possible.
- Cushioning buffers on the piston´s front faces with integrated ventilation ducts provide for mechanical cushioning of the cylinders.
- Multi-functional element: seal, guiding and cushioning element.
- Immediate response (full pressure load) thanks to incorporated venting channels.
- Good wear resistance.
- Ideal corrosion protection thanks to complete elastomer covering.
- Smooth running due to optimum adjustment of the functional lips.
- Easy attachment to the piston rod without additional sealing elements.
- Easy installation due to integrated static sealing function.
- Excellent media resistance in case of suitable compound selection.
- Low assembly height of the complete piston enables short cylinder designs.
- Versatile complete piston for nearly all cylinder designs.

Range of application

Complete piston with end cushioning for double-acting pneumatic cylinders, provided that no excessive lateral guidance loads will occur (long strokes and buckling).

Working pressure	≤ 10 bar
Working temperature	-20 °C to +80 °C
Surface speed	≤ 1 m/s
Media	Oiled as well as oil-free compressed air (after initial lubrication during assembly).

Compounds

Standard compound is an NBR-based elastomer with a hardness of approx. 70 Shore A with vulcanised metal, magnet and reinforcing discs.

Installation

The magnetic piston DR is connected to the piston rod by threading or riveting. The threaded connection should be secured against loosening. For operation in dry or oil-free air, a long-term lubricant must be used for the piston and cylinder.

In case of special operating conditions (specific pressure loads, temperature, speed, use in water, HFA, HFB fluids etc.), please contact our consultancy service for a selection of the material and design best suiting your particular application requirements.

KOVAZ.cz

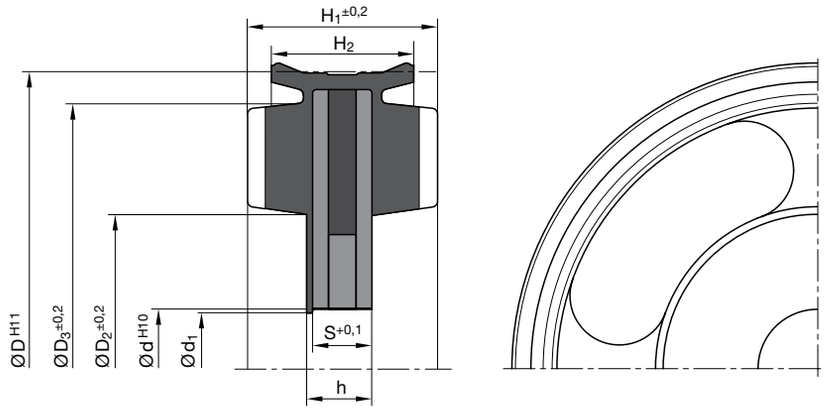

For surface finish, lead in chamfer and other installation dimensions see “General installation guidelines”.

D	d	H_1	H_2	S	h	D_2	D_3	Order code
16	4.5	6.5	5.1	2.65	2.95	6.9	13.5	DR 1604 Z4004
20	6	7.5	6.1	3.65	3.95	10.1	17.5	DR 2006 Z4004
25	7	9	7.6	3.65	4.15	11	21.9	DR 2507 Z4004
32	8	10.9	8.7	5	5.5	15	27.9	DR 3208 Z4004
40	8	11.9	9.7	5	5.5	20	35.7	DR 4008 Z4004
50	10	13.8	11.6	6	6.5	26	45.6	DR 5010 Z4004
63	12	13.8	11.6	6	6.5	33.2	58.25	DR 6312 Z4004
80	16	15.9	13.7	7	7.5	34.8	75.4	DR 8016 Z4004
100	20	17.9	15.7	8	8.5	47	95.4	DR A020 Z4004

KOVAS.CZ

Further sizes on request.

Profile cross-section	Profile reference	Page
Wipers		
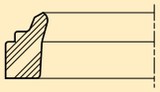	A2	88
Cushioning seals		
	PP	90
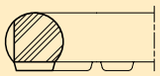	V6	93
Guiding elements		
Parker-Prädifa guiding elements		95
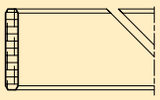	F2	96
O-rings		
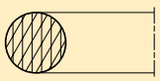	V1	99

KOVAR

The function of the pneumatic wiper ring A2 is to prevent dust, dirt, grains of sand and metal shavings from entering the dynamic rod guide. This is achieved by a special design which largely prevents the development of dents, protecting the guiding parts, and extending the working life of the seals.

This wiper is specially developed for pneumatic equipment operated with dry air and oil-free air. This wiper must be pregreased prior to installation.

Oversized diameters ensure a tight fit in the groove recess, thus preventing the penetration of foreign particles and dampness.

The profile A2 pneumatic wiper ring provides a technically proper closure at the cylinder requiring no screwings brackets, close tolerances, and no metal inserts. There will be no corrosion as in the case with metalcased wipers. For the groove recess fine fitting is not required.

- Good wear resistance.
- Smooth running due to optimum lubricant-retaining sealing lip geometry.
- High temperature resistance in case of suitable compound selection.
- Excellent media resistance in case of suitable compound selection.
- Product geometry prevents dirt deposits at the front face of the cylinder.
- Installation in closed and undercut housings.

Range of application

Suitable for axially operated rods in pneumatic cylinders, plungers and rod guides.

Working temperature	
A2 NBR N3587	-30 °C to +80 °C
A2 PUR P5008	-35 °C to +80 °C
Surface speed	≤ 2 m/s
Media	Oiled as well as oil-free compressed air (after initial lubrication during assembly).

Compounds

Standard: N3587, NBR compound (≈90 Shore A)
for low temperatures: N8613, NBR compound (≈ 80 Shore A)
for high temperatures: V3664, FKM compound (≈ 85 Shore A)
Standard: P5008, PUR compound (≈ 94 Shore A)
for low temperatures: P5009, PUR compound (≈ 94 Shore A)

Installation

The profile A2 wiper ring is supplied as a continous ring. Any pressure on the back of the ring should be avoided.
Intermediate sizes may easily be manufactured from the next largest ring with the same cross-section. For this, the ring should be cut at an angle of 90° to the circumfence length (+2 to 3 % in excess). Due to the excess length, the two ends will fit closely together so that no gap will occur. Gluing is not necessary. The wiper may easily be pressed into the groove recess with a resulting tight fit.

In case of special operating conditions (specific pressure loads, temperature, speed, use in water, HFA, HFB fluids etc.), please contact our consultancy service for a selection of the material and design best suiting your particular application requirements.

KOVAZ.cz

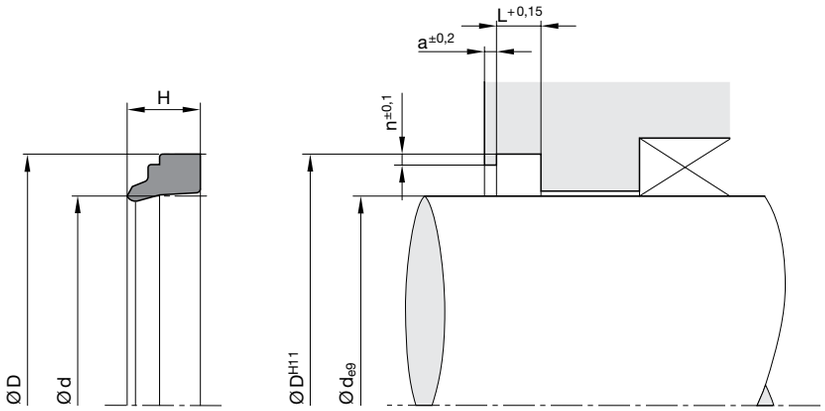

For surface finish, lead in chamfer and other installation dimensions see “General installation guidelines”.

d	D	H	L	a	n	Order code
A2 NBR N3587						
10	16	5	2.6	1	1	A2 1016 N3587
12	20	7	4	1	1	A2 1005 N3587
14	22	7	4	1	1	A2 1010 N3587
16	24	7	4	1	1	A2 1055 N3587
18	26	7	4	1	1	A2 1015 N3587
20	28	7	4	1	1	A2 2005 N3587
22	30	7	4	1	1	A2 2230 N3587
25	33	7	4	1	1	A2 2025 N3587
28	36	7	4	1	1	A2 2044 N3587
30	38	7	4	1	1	A2 3010 N3587
36	44	7	4	1	1	A2 3030 N3587
40	48	7	4	1	1	A2 4003 N3587
45	53	7	4	1	1	A2 4015 N3587
50	58	7	4	1	1	A2 5010 N3587
56	64	7	4	1	1	A2 5025 N3587
60	68	7	4	1	1	A2 6005 N3587
70	78	7	4	1	1	A2 7015 N3587
80	88	7	4	1	1	A2 8005 N3587
88	96	7	4	1	1	A2 8025 N3587
90	98	7	4	1	1	A2 9007 N3587
A2 PUR P5008						
20	28	7	4	1	1	A2 2005 P5008

Further sizes on request.

KOAZ.CZ

The profile PP pneumatic cushioning seal is specially designed for cushioning pistons in pneumatic cylinders.

- No mechanical check valves required since their function is performed by the cushioning rings.
- High cushioning consistency due to automatic centering, even in the case of misalignment of the cushioning spear and the cylinder head.
- Optimum use of design-related cushion travel.
- Robust seal profile for harshest operating conditions.
- Immediate response to reversed direction thanks to incorporated venting channels.
- Extreme wear resistance.
- Easier installation.
- Excellent media resistance in case of suitable compound selection.
- Installation in closed housings.

Range of application

For pneumatic cylinders with end-position cushioning.

Working pressure	≤ 16 bar [1)]
Working temperature	
PP NBR N3589	-30 °C to +80 °C
PP PUR P5008	-35 °C to +80 °C
Surface speed	≤ 1 m/s
Media	Oiled as well as oil-free compressed air (after initial lubrication during assembly).

[1)] Higher pressure peaks during cushioning process considered.

Compounds

Standard: N3589, NBR compound (≈ 85 Shore A)
for low temperatures: N8613, NBR compound (≈ 80 Shore A)
for high temperatures: V3839, FKM compound (≈ 90 Shore A)
Standard: P5008, PUR compound (≈ 94 Shore A)
for low temperatures: P5009, PUR compound (≈ 94 Shore A)

Installation

The profile PP cushioning seals are easily snapped into the groove, which should be free of all contaminants and foreign particles before installation. Care should be taken that the sealing lips are not damaged by sharp edges during installation.
Initial lubrication is essential for very long service life.

In case of special operating conditions (specific pressure loads, temperature, speed, use in water, HFA, HFB fluids etc.), please contact our consultancy service for a selection of the material and design best suiting your particular application requirements.

KOVAZ.cz

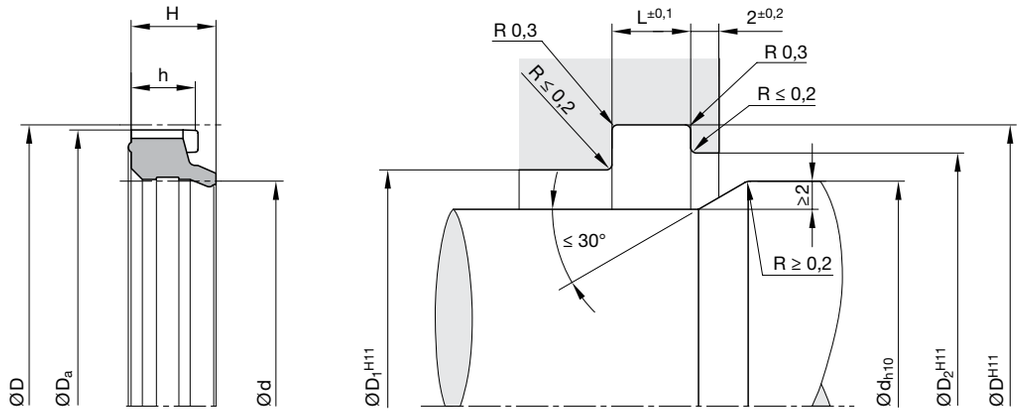

For surface finish, lead in chamfer and other installation dimensions see “General installation guidelines”.

d	D	H	h	D_a	D_1	D_2	L	Order code
PP NBR N3589								
5	9	4.1	3.2	8.7	5.5	7	3.7	PP 0509 N3589
6	10	4.1	3.2	9.7	6.5	8	3.7	PP 0610 N3589
8	11.6	3.5	2.8	11.3	8.5	10	3.3	PP 0811 N3589
9.5	15	4.6	3.7	14.7	10	12	4.5	PP 0915 N3589
10	18	7.8	6.3	17	10.5	15	7	PP 1018 N3589
12	18	5	4.1	17.8	13	15.5	4.8	PP 1218 N3589
12	20	7.8	6.3	19.1	13	17	7	PP 1220 N3589
14	22	7.8	6.3	21.1	15	19	7	PP 1422 N3589
16	22	5.5	4.5	21.5	17	19.5	5.2	PP 1622 N3589
16	24	7.8	6.3	23.1	17	21	7	PP 1624 N3589
18	26	7.8	6.3	25.1	19	23	7	PP 1826 N3589
20	28	7.8	6.3	27.1	21	24	7	PP 2028 N3589
22	30	7.8	6.3	29.1	23	26	7	PP 2230 N3589
25	33	7.8	6.3	32.1	26	29	7	PP 2533 N3589
28	36	7.8	6.3	35.1	29	32	7	PP 2836 N3589
30	40	7.8	6.2	39.1	31.5	35	7	PP 3040 N3589
32	42	7.8	6.2	41.1	33.5	37	7	PP 3242 N3589
36	46	7.8	6.2	45.1	37.5	41	7	PP 3646 N3589
40	50	7.8	6.2	49.1	41.5	45	7	PP 4050 N3589
50	60	7.8	6.2	59.1	51.5	55	7	PP 5060 N3589
50	67	11	11	66.2	53	58	12.5	PP 5067 N3589
57	74	11	11	73.2	60	65	12.5	PP 5774 N3589
70	87	11	11	86.3	73	78	12.5	PP 7087 N3589
78	95	11	11	94.3	81	86	12.5	PP 7895 N3589
PP PUR P5008								
8	11.6	3.5	2.8	11.1	8.5	10	3.3	PP 0811 P5008
9.5	15	4.6	3.7	14.7	10	12	4.5	PP 0915 P5008
12	18	5	4.1	17.8	13	15.5	4.8	PP 1218 P5008
14	22	7.8	6.3	21.05	15	19	7	PP 1422 P5008
16	22	5.5	4.5	21.5	17	19.5	5.2	PP 1622 P5008
16	24	7.8	6.3	23.1	17	21	7	PP 1624 P5008
18	26	7.8	6.3	25.1	19	23	7	PP 1826 P5008
20	28	7.8	6.3	27.1	21	24	7	PP 2028 P5008

Further sizes on request.

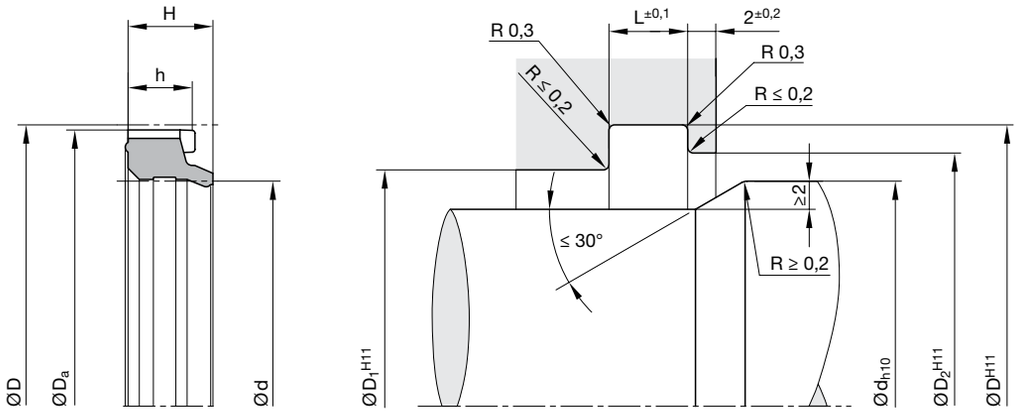

For surface finish, lead in chamfer and other installation dimensions see “General installation guidelines”.

d	D	H	h	D_a	D_1	D_2	L	Order code
22	30	7.8	6.3	29.1	23	26	7	PP 2230 P5008
25	33	7.8	6.3	32.1	26	29	7	PP 2533 P5008
28	36	7.8	6.3	35.1	29	32	7	PP 2836 P5008
30	40	7.8	6.3	39.1	31.5	35	7	PP 3040 P5008
32	42	7.8	6.2	41.1	33.5	37	7	PP 3242 P5008
36	46	7.8	6.2	45.1	37.5	41	7	PP 3646 P5008
40	50	7.8	6.2	49.1	41.5	45	7	PP 4050 P5008
50	60	7.8	6.2	59.1	51.5	55	7	PP 5060 P5008
57	74	11	11	73.2	60	65	12.5	PP 5774 P5008
78	95	11	11	94.3	81	86	12.5	PP 7895 P5008

Further sizes on request.

KOVI.CZ

The profile V6 pneumatic cushioning seal is specially designed for cushioning pistons in pneumatic cylinders.

- No mechanical check valves required since their function is performed by the cushioning rings.
- Optimum use of design-related cushion travel.
- Good wear resistance.
- Easier installation.
- High temperature resistance in case of suitable compound selection.
- Excellent media resistance in case of suitable compound selection.
- Immediate response to reversed direction thanks to incorporated venting channels.
- Short axial assembly length.
- Short radial assembly depth.
- Installation in closed and undercut housings.

Range of application

For pneumatic cylinders with end-position cushioning.

Working pressure	≤ 16 bar [1)]
Working temperature	-30 °C to +80 °C
Surface speed	≤ 1 m/s
Media	Oiled as well as oil-free compressed air (after initial lubrication during assembly).

[1)] Higher pressure peaks during cushioning process considered.

Compounds

Standard: N3578, NBR compound (≈ 75 Shore A)
for low temperatures: N8613, NBR compound (≈ 80 Shore A)
for high temperatures: V3839, FKM compound (≈ 90 Shore A)

Installation

For the cushioning spear (Ø d) we recommend a surface finish of R_t = 2 to 3 µm with flattened or polished process traces. The groove bottom (Ø D^{H11}) should not exceed surface finish of R_t = 10 µm with flattened or polished traces.

In case of special operating conditions (specific pressure loads, temperature, speed, use in water, HFA, HFB fluids etc.), please contact our consultancy service for a selection of the material and design best suiting your particular application requirements.

KOVAZ.cz

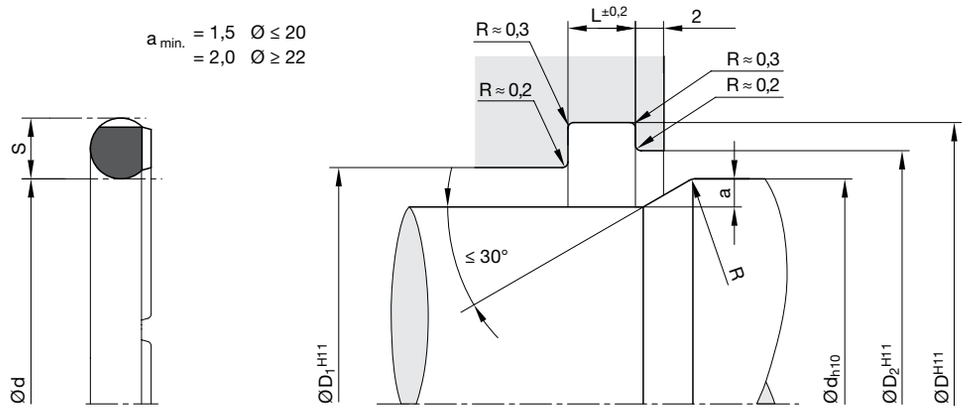

For surface finish, lead in chamfer and other installation dimensions see “General installation guidelines”.

d	S	D	D_1	D_2	R	L	Order code
10	4	18	10.5	12	3	4.8	V6 1004 N3578
12	4	20	12.5	14	3	4.8	V6 1204 N3578
14	4	22	14.5	16	3	4.8	V6 1404 N3578
16	4	24	16.5	18	3	4.8	V6 1604 N3578
18	4	26	18.5	20	3	4.8	V6 1804 N3578
20	4	28	20.5	22	3	4.8	V6 2004 N3578
22	4	30	22.5	24	3	4.8	V6 2204 N3578
24	4	32	24.5	26	3	4.8	V6 2404 N3578
25	4	33	25.5	27	3	4.8	V6 2504 N3578
26	5	36	26.6	28	4	6	V6 2605 N3578
28	5	38	28.6	30	4	6	V6 2805 N3578
30	5	40	30.6	32	4	6	V6 3005 N3578
32	5	42	32.6	34	4	6	V6 3205 N3578
34	5	44	34.6	36	4	6	V6 3405 N3578
35	5	45	35.6	37	4	6	V6 3505 N3578
36	5	46	36.6	38	4	6	V6 3605 N3578
38	5	48	38.6	40	4	6	V6 3805 N3578
40	5	50	40.6	42	4	6	V6 4005 N3578
45	5	55	45.6	47	4	6	V6 4505 N3578
50	5	60	50.6	52	4	6	V6 5005 N3578
55	7	69	55.6	58	5	8.4	V6 5507 N3578
60	7	74	60.6	63	5	8.4	V6 6007 N3578
65	7	79	65.6	68	5	8.4	V6 6507 N3578
70	7	84	70.6	73	5	8.4	V6 7007 N3578
80	7	94	80.6	83	5	8.4	V6 8007 N3578
100	7	114	100.6	103	5	8.4	V6 A007 N3578
110	7	124	110.6	113	5	8.4	V6 B007 N3578

Further sizes on request.

Parker-Prädifa guiding elements

Guide rings and tapes prevent metallic contact between pistons and cylinders or rods and glands where forces act perpendicular to the direction of movement.
These lateral forces (F) lead to a pressure distribution as shown in fig. 1. In practice, calculation based on the projected surface has proved to be a simple and more useful method. This means that the load carrying area (A) can be calculated from the length (H) multiplied by the diameter (D) (see fig. 2). The surface obtained is about 5 times larger than the assumed bearing area of fig. 1, so that lower specific loads must be reckoned with. In order to obtain the same values for lateral forces “F”, the specific load must be only 1/5 of the max. force shown in fig. 1. The indicated permissible specific forces ($F_{perm.}$) take this into account, and the admissible specific pressure mentioned relates to the projected area as shown in fig. 2.

The values of the gaps “e” or shoulder diameters specified on drawings and Tables guarantee maximum efficiency of the guiding elements.
For operation together with a seal, however, the extrusion gap specified for this particular seal is most important. Especially under high pressure the maximum gap behind the seal must be the basis for the determination of the piston-shoulder diameter between seal and guide tape (refer to chapter “Maximum gap allowance”). If the specified nominal measurements and tolerances are used to calculate the groove bottom diameter of the guide tapes, optimum guidance quality will be obtained and metallic contact prevented.

Figure:
H = Length of the guiding tape

Figure 1:

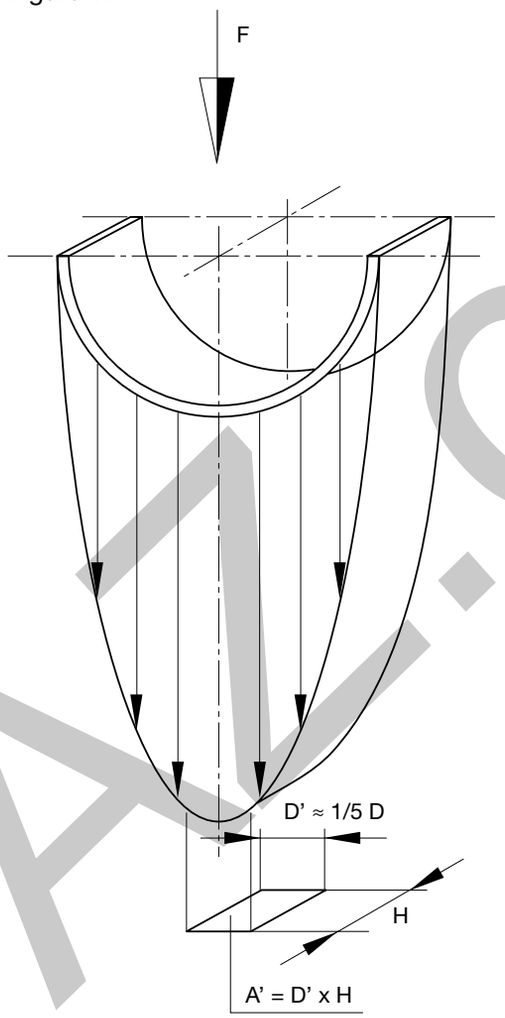

Figure 2:

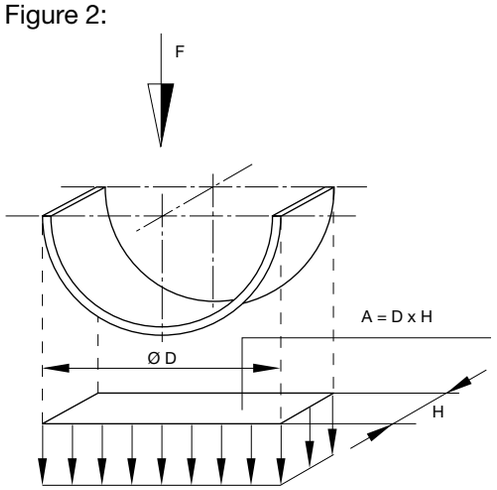

KOVAZ.cz

The PTFE guidance tape profile F2 is specially designed for use in pneumatic cylinders.

- Due to application-optimized geometry and compounds suitable for use in oiled as well as in oil-free air (after initial lubrication on assembly).
- Vibration absorption effect.
- Very good emergency running properties in low-lube conditions.
- High load capacity (compressive strength), low wear and reduced friction due to special carbon additive in PTFE material.
- Dimensions according to ISO 10766.
- Also available as bulk material.
- Suitable for cylinder repairs.
- Ideally suited for large-diameter.
- Bulk material.
- Installation in closed housings.

Range of application

Working temperature	-100 °C to +200 °C
Surface speed	≤ 10 m/s

Compounds

Polon® 033, PTFE + 25 % carbon.

Installation

The gap dimensions “e” guarantee an optimum service life of the guiding tapes. For the seals, however, the gaps as mentioned on the respective catalogue pages are to be considered when it is essential to observe full working conditions (“Range of application”).

The inner diameter of the groove can be calculated by:
d = D - 2S.
The gap “e” between cylinder and piston is the maximum value and should not be exceeded.

In case of special operating conditions (specific pressure loads, temperature, speed, use in water, HFA, HFB fluids etc.), please contact our consultancy service for a selection of the material and design best suiting your particular application requirements.

KOVAZ.cz

Calculation of the stretched length “U”

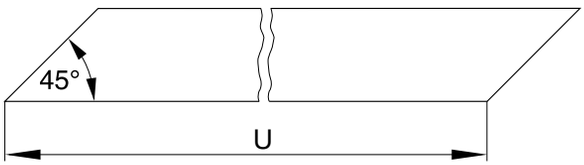

The length “U” of the tape is to be calculated from the mean circumferential length less the clearance at the joint “k”. The k-values stated in the table are based on a temperature rise of 120 °C.

Cyl.	Stretched length U		Gap
Ø D^{H11}	Piston	Tol.	k
≤ 45	$U = \pi \cdot (D - S) - k$	± 0.25	1.8
> 45		± 0.40	3.5
> 80		± 0.60	4.4
> 100		± 0.80	5.6
> 125		± 1.00	6.6
> 150		± 1.20	8.0
> 180		± 1.40	9.5
> 215		± 1.60	12.0
> 270		± 1.80	15.5
> 330		± 2.00	19.0

Selection of the guiding height H

The height H of the guiding tape has to be calculated for the worst possible conditions considering the maximum radial force. The specific load at the tape in case of operating temperatures of ≤ 100 °C should not exceed $q = 2.5\ N/mm^2$. The calculation of this figure is based on the area from the projection of the height H of the guiding tape multiplied by the cylinder diameter D. The maximum permissible radial force $F_{perm.}$ can be obtained with the formula: $F_{perm.} = H \times D \times q_{perm.}$

Specific data can be found in the nomograph.

Example:
A guiding tape diameter D of 70 mm and a guiding tape height of 8 mm result in a maximum permissible radial force of 0.14 kN or 140 N.

KOVAZ.CZ

Nomograph for calculating of the specific load

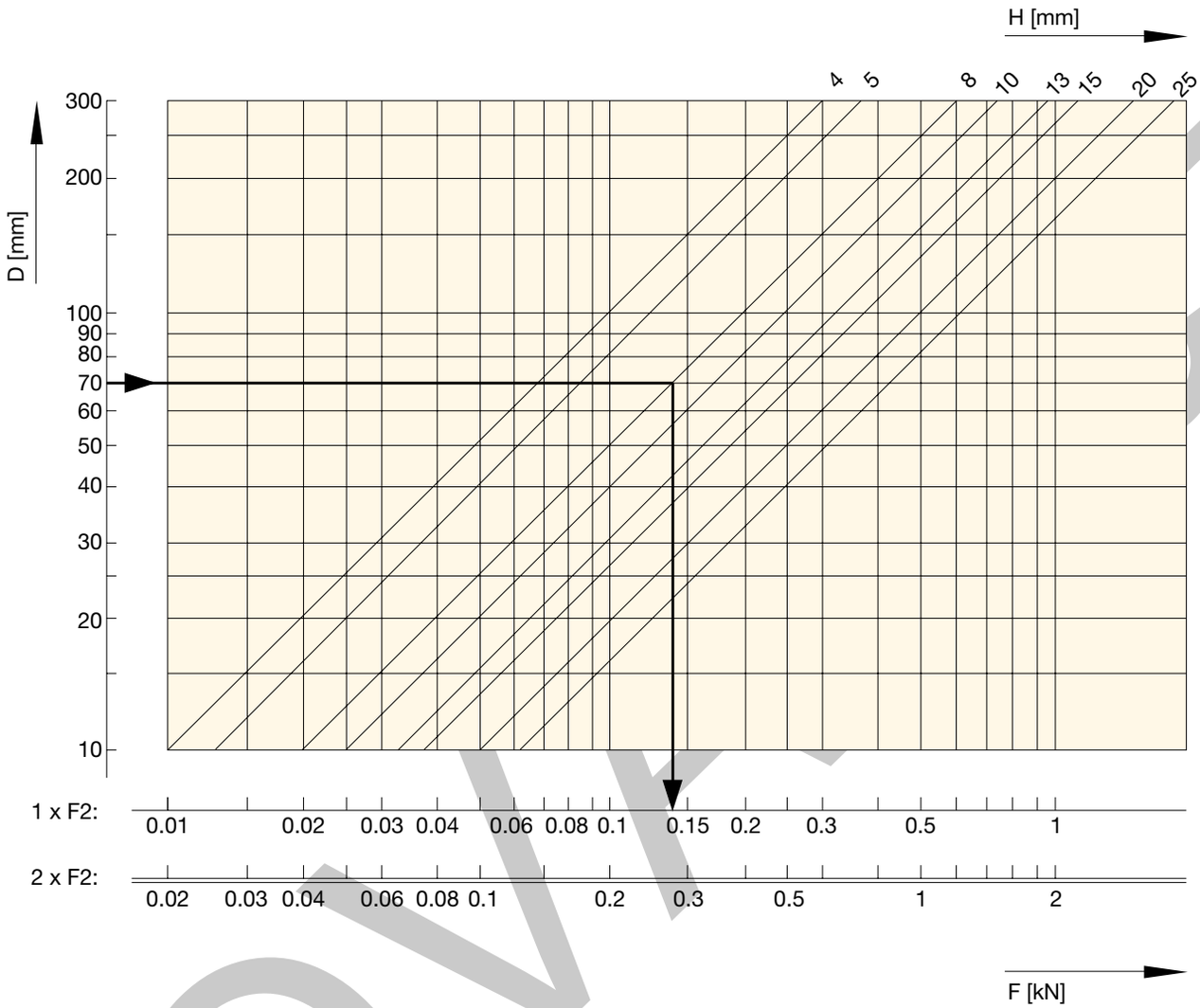

KOVRAZ

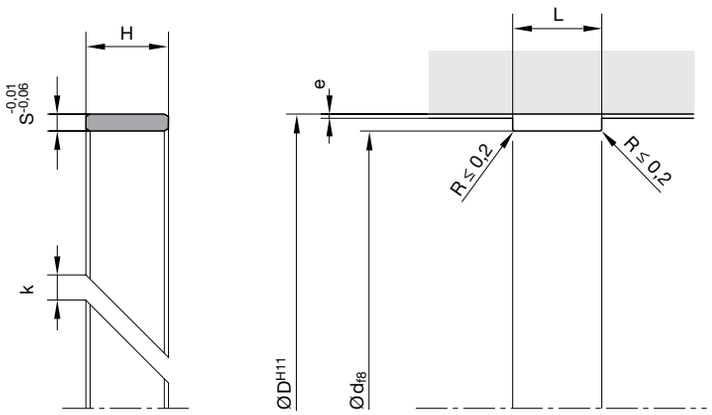

For surface finish, lead in chamfer and other installation dimensions see “General installation guidelines”.

Housing dimensions

Series no.	Guiding tape	Groove			
	S (mm)	L (mm)	H (mm)	d (mm)	e (mm)
15040	1.55	4.0 $^{+0,1}$	3.9 $^{-0,15}$	D - 3.1	0.25
15050	1.55	5.0 $^{+0,1}$	4.9 $^{-0,15}$	D - 3.1	0.25
15080	1.55	8.0 $^{+0,1}$	7.8 $^{-0,20}$	D - 3.1	0.25
15090	1.55	9.0 $^{+0,1}$	8.8 $^{-0,20}$	D - 3.1	0.25
15100	1.55	10.0 $^{+0,1}$	9.8 $^{-0,20}$	D - 3.1	0.25
15120	1.55	12.0 $^{+0,1}$	11.8 $^{-0,20}$	D - 3.1	0.25
15130	1.55	13.0 $^{+0,1}$	12.8 $^{-0,20}$	D - 3.1	0.35
15150	1.55	15.0 $^{+0,1}$	14.8 $^{-0,20}$	D - 3.1	0.35
15200	1.55	20.0 $^{+0,1}$	19.5 $^{-0,40}$	D - 3.1	0.35
15250	1.55	25.0 $^{+0,1}$	24.5 $^{-0,40}$	D - 3.1	0.35

Ordering example

Mating surface	aluminium
Piston diamteter	32 mm
Groove	1.5 x 4.0 mm
a) by the metre	F2 0000 033 15040 A (4.0 x 1.5)
F2	Profile
0000	-
033	Compound
15040	Series no.
A	Type of cut (45°)
b) cut to length	F2 0320 033 15040 A (4.0 x 1.5 x 94.0)
F2	Profile
0320	Piston diameter x 10
033	Compound
15040	Series no.
A	Type of cut (45°)

KOVA CZ

Ultrathan® O-rings are made from an in-house developed polyurethane compound with a very low compression set.
This low compression set made it possible to produce polyurethane O-rings. An O-ring made of polyurethane material is more resistant to extrusion than standard O-rings, so that it may be favourably used in all applications with very high pulsating pressures, or with restricted housing space not allowing the use of back-up rings.
Due to the high abrasion resistance, polyurethane O-rings are well suited for dynamic applications. Very good results have been achieved e.g. with air valves sealing at pilot pistons or at the main spool dynamic sealing system. Also in applications with short stroke positioning and clamping cylinders, and in valves for systems operated with poorly lubricating HFA fluids. Polyurethane O-rings are used for control purposes; an example is the crossing of drill ports during which O-rings made of rubber elastomers are vulnerable to abrasive wear, significantly shortening their service life.

- Robust seal profile for harshest operating conditions.
- Extreme wear resistance.
- Suitable for fully automatic installation
- Insensitive to pressure peaks.
- High extrusion resistance.
- Excellent media resistance in case of suitable compound selection.
- Suitable compounds available for special requirements of the chemical process industry.
- Suitable compounds available for special requirements of the food processing industry.
- Installation in closed and undercut housings.
- Can be used in existing O-ring grooves.
- Low compression set.
- Machined small-volume series and samples available with short lead times.

Range of application

The Ultrathan® O-rings are used when the physical properties of other compounds are insufficient.
Mainly for the sealing of cylinders, controls and valves.

Working pressure	≤ 600 bar [1)]
Working temperature	
Hydraulics	-35 °C to +100 °C
in water, HFA and HFB fluids	-35 °C to +50 °C
Pneumatics	-35 °C to +80 °C
Surface speed	≤ 0.5 m/s
Media	Mineral-oil based hydraulic oils, HFA and HFB fluids.

[1)] With reduced extrusion gap and suitable cross-section.

Compounds

The compound P5008 is a Parker standard material based on polyurethane with a Shore A hardness of approx. 93. Its main advantages in comparison with other polyurethane materials currently available on the market are the increased heat resistance and the lower compression set.
For fluids containing water, we recommend our hydrolysis-resistant compounds P5000, P5001, P5012 and P5070.

Installation

Due to the higher modulus of the polyurethane compounds, the housings are slightly different from those of standard O-rings.
All edges should be rounded by at least R = 0.1.
In the case of special applications, please discuss your problems with our Consultancy Service.

KOVAZ.cz

For dynamic applications the following minimum cross-sections apply:

S = 5.7 mm up to diameter d ≤ 150 mm
S = 7.0 mm up to diameter d ≤ 200 mm

Polyurethane O-rings show no tendency to twisting.

In case of special operating conditions (specific pressure loads, temperature, speed, use in water, HFA, HFB fluids etc.), please contact our consultancy service for a selection of the material and design best suiting your particular application requirements.

KOVAZ.cz

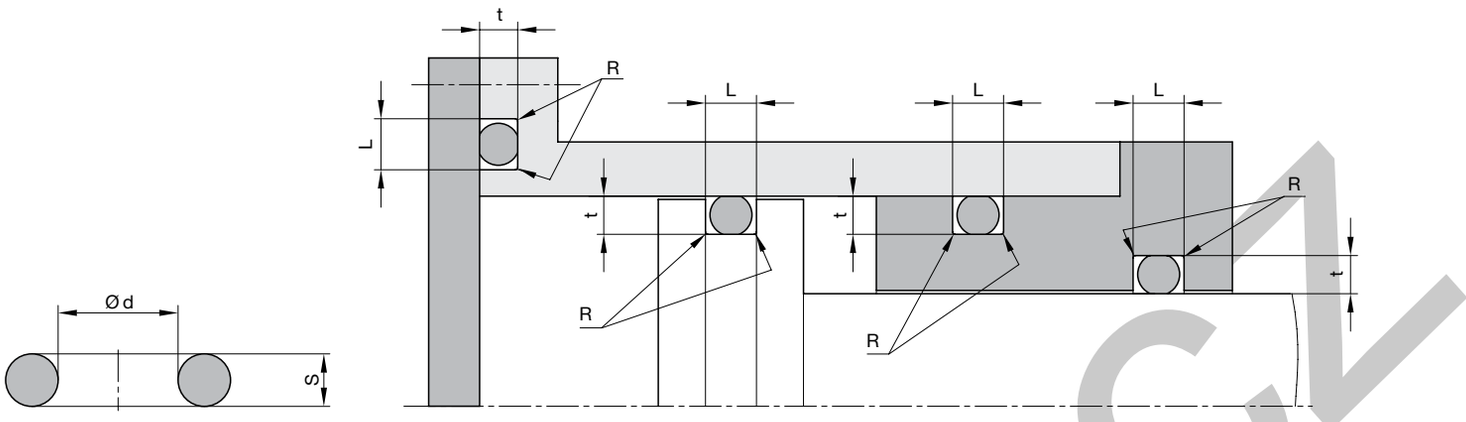

For surface finish, lead in chamfer and other installation dimensions see “General installation guidelines”.

O-ring glandsizes

S (mm)	R (mm)	Groove depth (radial) t (mm) *			Groove width (axial) L (mm)
		static	dynamic hydraulic	dynamic pneumatic	without Back-up
1.00	0.2	$0.65^{\pm0.05}$	$0.75^{\pm0.02}$	$0.80^{\pm0.02}$	$1.40^{+0.2}$
1.50	0.2	$1.05^{\pm0.05}$	$1.20^{\pm0.02}$	$1.25^{\pm0.02}$	$2.00^{+0.2}$
1.80	0.2	$1.30^{\pm0.05}$	$1.45^{\pm0.02}$	$1.55^{\pm0.02}$	$2.40^{+0.2}$
2.00	0.2	$1.50^{\pm0.05}$	$1.65^{\pm0.02}$	$1.75^{\pm0.02}$	$2.70^{+0.2}$
2.50	0.2	$1.95^{\pm0.05}$	$2.10^{\pm0.02}$	$2.20^{\pm0.02}$	$3.40^{+0.2}$
2.65	0.3	$2.05^{\pm0.05}$	$2.25^{\pm0.02}$	$2.35^{\pm0.02}$	$3.60^{+0.2}$
3.00	0.3	$2.40^{\pm0.05}$	$2.55^{\pm0.02}$	$2.70^{\pm0.02}$	$4.20^{+0.2}$
3.50	0.3	$2.80^{\pm0.07}$	$3.05^{\pm0.05}$	$3.20^{\pm0.05}$	$4.80^{+0.2}$
3.55	0.3	$2.85^{\pm0.07}$	$3.10^{\pm0.05}$	$3.25^{\pm0.05}$	$4.80^{+0.2}$
4.00	0.3	$3.25^{\pm0.07}$	$3.50^{\pm0.05}$	$3.65^{\pm0.05}$	$5.40^{+0.2}$
5.00	0.3	$4.15^{\pm0.10}$	$4.45^{\pm0.05}$	$4.65^{\pm0.05}$	$6.80^{+0.2}$
5.30	0.5	$4.40^{\pm0.10}$	$4.70^{\pm0.05}$	$4.90^{\pm0.05}$	$7.20^{+0.2}$
7.00	0.5	$5.85^{\pm0.10}$	$6.25^{\pm0.05}$	$6.55^{\pm0.05}$	$9.60^{+0.2}$

* Groove depth t = Back-up dimension t

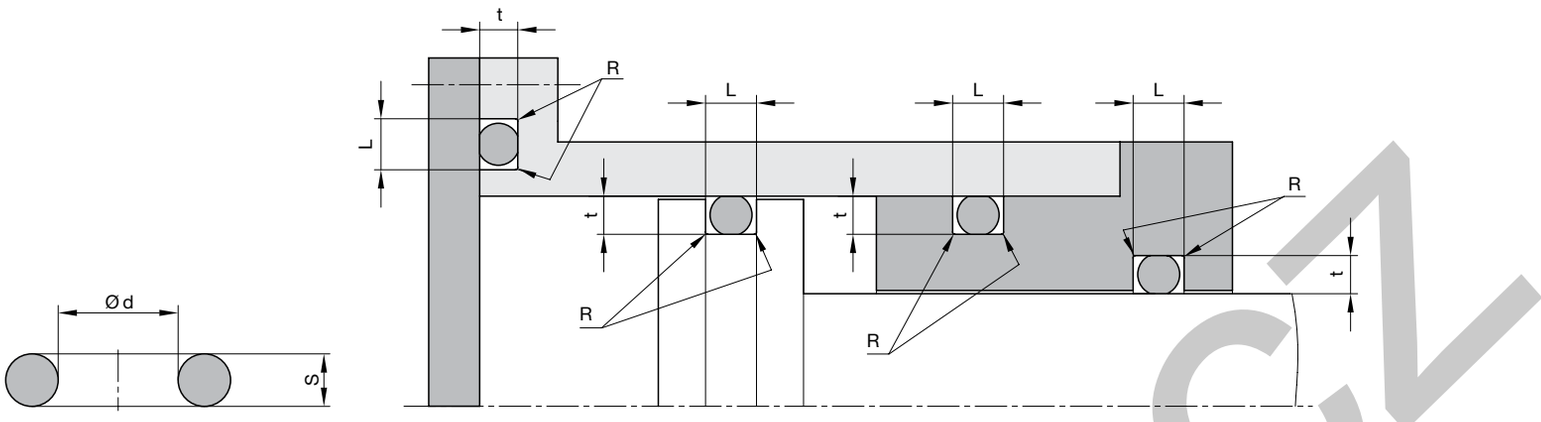

For surface finish, lead in chamfer and other installation dimensions see “General installation guidelines”.

Recommended interference

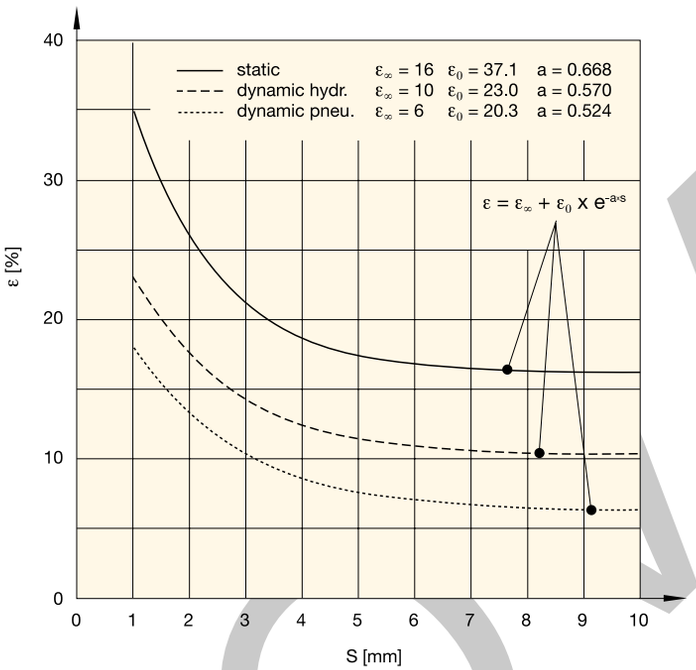

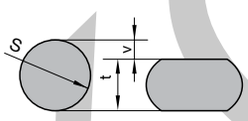

ε [mm]: $\varepsilon = \frac{v}{100} \cdot 100\ [\%]$

t [mm]: $t = S \cdot (1 - \frac{\varepsilon}{100})$

KOMAZ.CZ

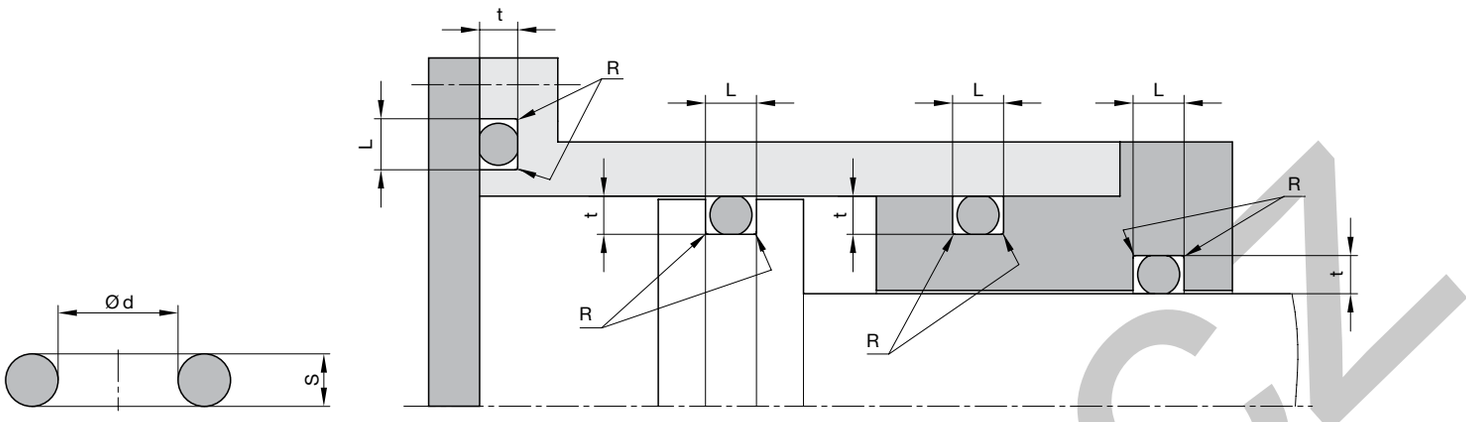

For surface finish, lead in chamfer and other installation dimensions see “General installation guidelines”.

d	S	Order code
1.78	1.7	V1 0067 P5008
2	2	V1 0087 P5008
2.5	1.2	V1 0110 P5008
2.9	1.8	V1 0140 P5008
3	1.5	V1 0151 P5008
3.2	1.8	V1 0166 P5008
3.4	1.9	V1 0180 P5008
3.5	1.2	V1 0185 P5008
4	1.5	V1 0208 P5008
4	2	V1 0212 P5008
4	2.15	V1 0214 P5008
4.2	1.9	V1 0235 P5008
4.6	2	V1 0263 P5008
5	1.5	V1 0285 P5008
5	2	V1 0291 P5008
5	2.5	V1 0294 P5008
5.28	1.78	V1 0305 P5008
5.3	2.4	V1 0310 P5008
5.7	1.9	V1 0320 P5008
6	2	V1 0335 P5008
6.3	2.4	V1 0362 P5008
6.4	2	V1 0367 P5008
6.7	2	V1 0379 P5008
7	2	V1 0397 P5008
7	2.4	V1 0399 P5008
7.3	2.4	V1 0430 P5008
7.5	2	V1 0443 P5008
8	1.65	V1 0484 P5008
8	2	V1 0485 P5008
8	2.5	V1 0490 P5008
8.3	2.4	V1 0525 P5008
9	1.5	V1 0562 P5008
9	2	V1 0566 P5008
9.19	2.62	V1 0603 P5008
9.25	1.78	V1 0615 P5008
9.3	2.4	V1 0620 P5008
10	2	V1 1010 P5008
10	2.5	V1 1015 P5008
10	3	V1 1020 P5008
10.3	2.4	V1 1045 P5008
10.77	2.62	V1 1059 P5008
10.82	1.78	V1 1065 P5008
11	2	V1 1074 P5008
11	3	V1 1085 P5008
11.3	2.4	V1 1115 P5008
11.3	2.5	V1 1117 P5008
12	2	V1 1146 P5008
12	2.5	V1 1150 P5008
12	3	V1 1155 P5008
12.1	2.7	V1 1182 P5008
12.3	2.4	V1 1190 P5008
12.37	2.62	V1 1194 P5008
12.42	1.78	V1 1200 P5008
13	2	V1 1219 P5008
13	3	V1 1227 P5008
13.3	2.4	V1 1253 P5008
13.3	2.5	V1 1255 P5008
13.59	2.7	V1 1271 P5008
13.94	2.62	V1 1269 P5008
14	1.78	V1 1284 P5008
14	2	V1 1287 P5008
14	3	V1 1298 P5008
14.03	2.61	V1 1312 P5008
15	3	V1 1365 P5008
15.3	2.4	V1 1397 P5008
15.54	2.62	V1 1415 P5008
15.6	1.78	V1 1418 P5008
16	2	V1 1435 P5008

Further sizes on request.

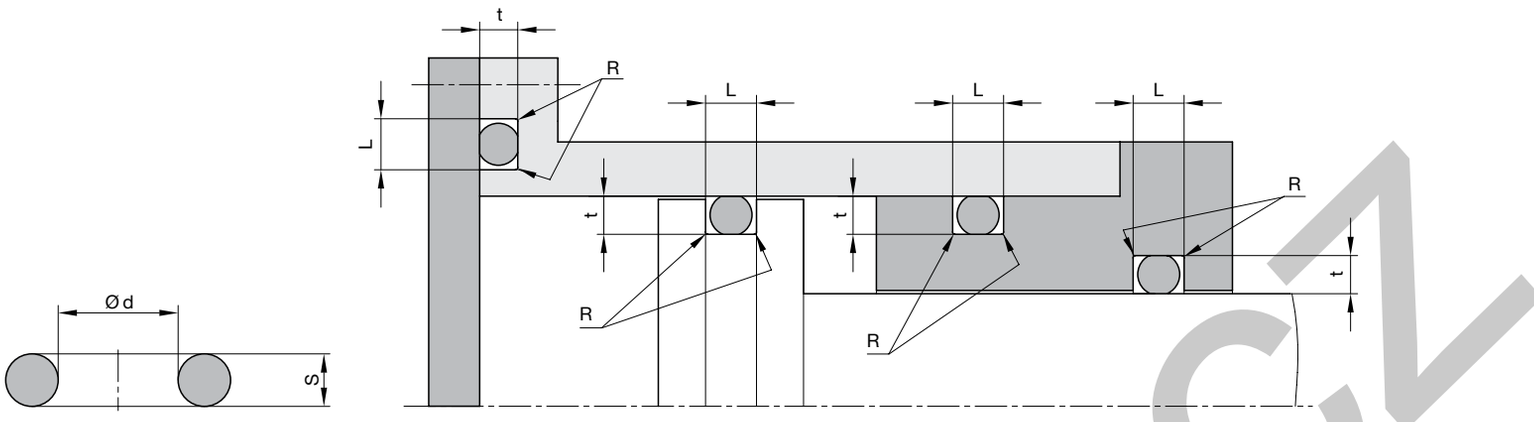

For surface finish, lead in chamfer and other installation dimensions see “General installation guidelines”.

d	S	Order code
16.2	2	V1 1478 P5008
16.3	2.4	V1 1480 P5008
16.4	2	V1 1483 P5008
16.9	2.7	V1 1505 P5008
17	2	V1 1520 P5008
17	3	V1 1530 P5008
17.12	2.62	V1 1556 P5008
18	2	V1 1575 P5008
18.2	3	V1 1615 P5008
18.4	2.7	V1 1622 P5008
18.64	3.53	V1 1638 P5008
18.72	2.62	V1 1640 P5008
19	2	V1 1670 P5008
19	2.5	V1 1675 P5008
19.2	3	V1 1730 P5008
19.3	2.4	V1 1740 P5008
19.4	2.1	V1 1947 P5008
20	2	V1 2015 P5008
20	2.5	V1 2020 P5008
20	3	V1 2025 P5008
20	5	V1 2045 P5008
20.22	3.53	V1 2090 P5008
20.3	2.4	V1 2105 P5008
21	3.53	V1 2141 P5008
21.3	2.4	V1 2167 P5008
21.3	3.6	V1 2170 P5008
21.82	3.53	V1 2181 P5008
21.95	1.78	V1 2195 P5008
22	1.5	V1 2204 P5008
22	2	V1 2208 P5008
22.2	3	V1 2255 P5008
23	2.5	V1 2273 P5008
23	3	V1 2278 P5008
23.47	2.62	V1 2313 P5008

d	S	Order code
23.5	3.6	V1 2317 P5008
24	2	V1 2330 P5008
24	2.5	V1 2335 P5008
24.99	3.53	V1 2394 P5008
25	2	V1 2405 P5008
25	5	V1 2435 P5008
25.2	3	V1 2477 P5008
26	2	V1 2497 P5008
26.2	3	V1 2540 P5008
27	2.5	V1 2575 P5008
28	2	V1 2620 P5008
28	3	V1 2630 P5008
28	4	V1 2640 P5008
28.17	3.53	V1 2658 P5008
28.24	2.62	V1 2664 P5008
29.2	3	V1 2742 P5008
29.74	2.95	V1 2764 P5008
29.87	1.78	V1 2780 P5008
30	2	V1 3010 P5008
30.3	2.4	V1 3073 P5008
31.54	3.53	V1 3145 P5008
32	2	V1 3158 P5008
32	3	V1 3168 P5008
32	4	V1 3178 P5008
33	2	V1 3220 P5008
33	3.5	V1 3235 P5008
34.2	3	V1 3351 P5008
34.52	3.53	V1 3361 P5008
34.59	2.62	V1 3355 P5008
35	2	V1 3370 P5008
35	3	V1 3380 P5008
35.2	3	V1 3415 P5008
36	2	V1 3430 P5008
36	3.53	V1 3446 P5008

Further sizes on request.

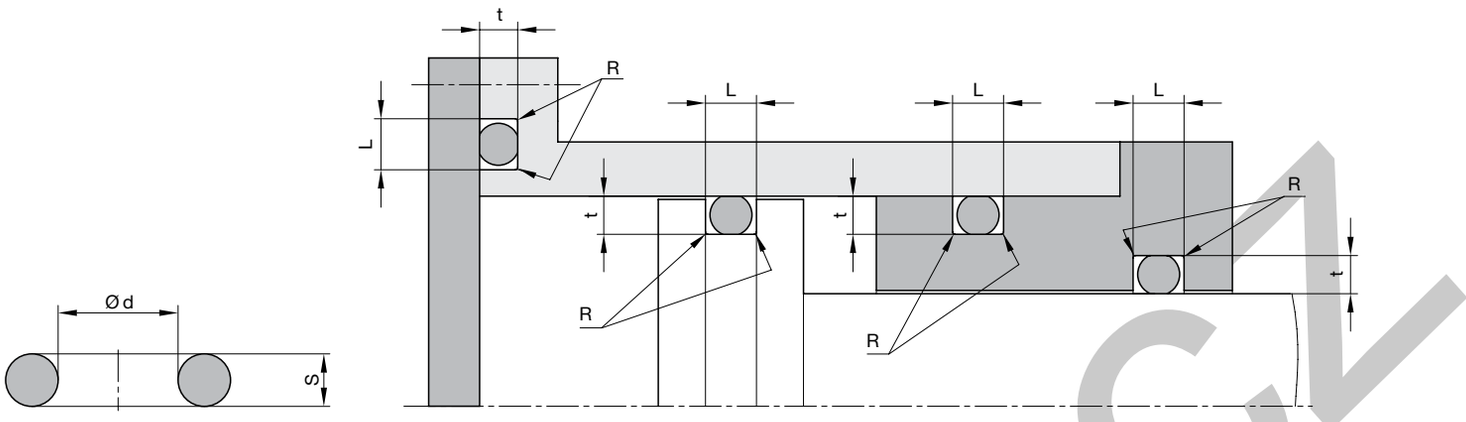

For surface finish, lead in chamfer and other installation dimensions see “General installation guidelines”.

d	S	Order code
37	4	V1 3540 P5008
37.69	3.53	V1 3579 P5008
38	2	V1 3595 P5008
39	2	V1 3650 P5008
39.2	3	V1 3683 P5008
40	2	V1 4015 P5008
40.2	3	V1 4077 P5008
40.64	5.33	V1 4086 P5008
43.82	5.33	V1 4294 P5008
44	3	V1 4305 P5008
45	3	V1 4400 P5008
45	3.5	V1 4405 P5008
45	4	V1 4410 P5008
46.99	5.33	V1 4514 P5008
48.9	2.62	V1 4645 P5008
50	2	V1 5015 P5008
50	3	V1 5025 P5008
50.16	5.33	V1 5066 P5008
50.2	3	V1 5069 P5008
53.34	5.33	V1 5274 P5008
54	3	V1 5300 P5008
55	4	V1 5360 P5008
56	3	V1 5410 P5008
56	6	V1 5422 P5008
59	3.53	V1 5580 P5008
59.69	5.33	V1 5604 P5008
60	3	V1 6020 P5008
60	4	V1 6030 P5008
60	5	V1 6040 P5008
64	3	V1 6285 P5008
64.2	5.7	V1 6322 P5008
65	5	V1 6370 P5008
66	5.33	V1 6443 P5008
68	3.53	V1 6551 P5008

d	S	Order code
69.2	5.7	V1 6654 P5008
69.21	5.33	V1 6655 P5008
69.52	2.62	V1 6677 P5008
70	3	V1 7020 P5008
70	5	V1 7040 P5008
75	3	V1 7340 P5008
75.8	3.53	V1 7391 P5008
79.77	5.33	V1 7619 P5008
80	3	V1 8020 P5008
80	5	V1 8040 P5008
82.14	3.53	V1 8168 P5008
85	5	V1 8275 P5008
88	5.33	V1 8423 P5008
89.2	5.7	V1 8485 P5008
90	5	V1 9040 P5008
91.4	5.33	V1 9113 P5008
95	5	V1 9330 P5008
99.6	5.7	V1 9585 P5008
100	5.33	V1 A043 P5008
100.97	5.33	V1 A089 P5008
105	3	V1 A275 P5008
107.28	5.33	V1 A419 P5008
109.2	5.7	V1 A495 P5008
109.6	5.7	V1 A530 P5008
110	5	V1 B030 P5008
110.49	5.33	V1 B066 P5008
112	6	V1 B117 P5008
114.6	5.7	V1 B216 P5008
116.84	6.99	V1 B297 P5008
119.6	5.7	V1 B398 P5008
120	4	V1 C030 P5008
120	5	V1 C040 P5008
120.02	5.33	V1 C072 P5008
124.6	5.7	V1 C307 P5008

Further sizes on request.

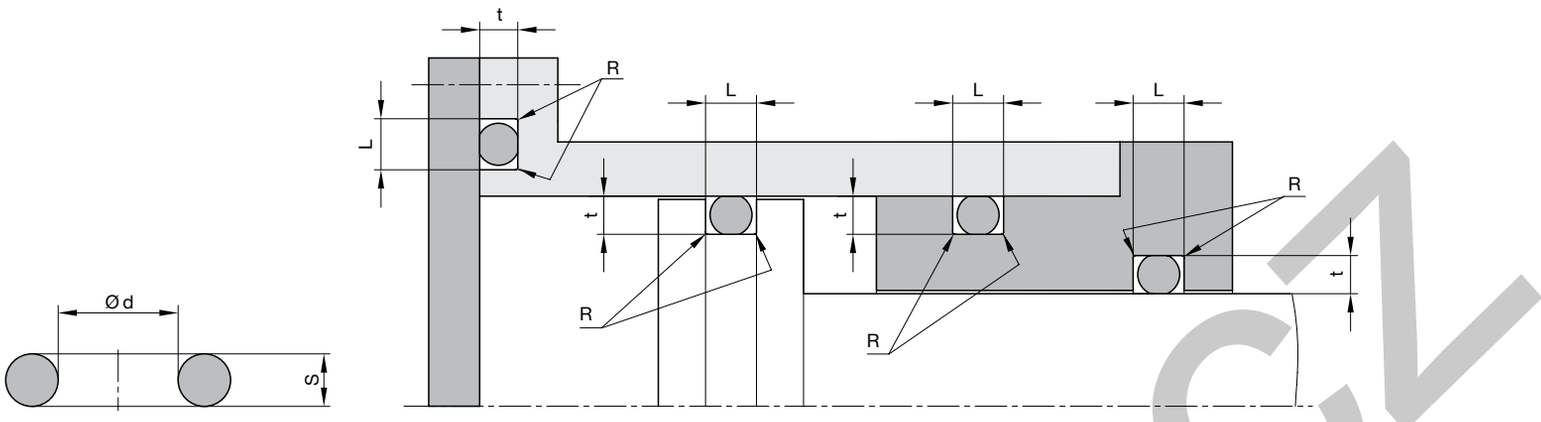

For surface finish, lead in chamfer and other installation dimensions see “General installation guidelines”.

d	S	Order code
126.37	6.99	V1 C363 P5008
129.54	5.33	V1 C480 P5008
130	5.33	V1 D039 P5008
134.6	5.7	V1 D185 P5008
135	5	V1 D205 P5008
136.12	3.6	V1 D276 P5008
151.77	6.99	V1 F085 P5008
152	5	V1 F123 P5008
158	5.7	V1 F292 P5008
178	5.7	V1 H240 P5008
190	5	V1 K035 P5008
196.22	6.99	V1 K247 P5008
200	5	V1 L025 P5008
202.57	6.99	V1 L073 P5008
225	5	V1 M135 P5008

Further sizes on request.

KOVAZ.CZ

Notes

KOVAZ.cz

Notes

KOVAZ.CZ

Notes

KOVAZ.cz

Notes

KOVAZ.CZ

Notes

KOVAZ.cz

Notes

KOVAZ.CZ

Notes

KOVAZ.cz

KOVAZ.cz

Parker-Prädifa Worldwide

AE – United Arab Emirates,
Dubai
Tel: +971 4 8127100
parker.me@parker.com

AR – Argentina, Buenos Aires
Tel: +54 3327 44 4129

AT – Austria, Wiener Neudorf
Tel: +43 2622 23501-0
parker.austria@parker.com

AU – Australia, Castle Hill
Tel: +61 2 9634 7777

AZ – Azerbaijan, Baku
Tel: +994 50 2233 458
parker.azerbaijan@parker.com

BE – Belgium, Boom
Tel: +32 3 880 81 50

BR – Brazil, Sao Paulo / SP
Tel: +55 11 39 15 8500

BY – Belarus, Minsk
Tel: +375 17 209 9399
parker.belarus@parker.com

CA – Canada, Milton, Ontario
Tel: +1 905 693 3000

CH – Switzerland, Etoy
Tel: +41 21 821 8700
parker.switzerland@parker.com

CL – Chile, Santiago
Tel: +56 2 623 1216

CN – China, Shanghai
Tel: +86 21 2899 5000

CZ – Czech Republic,
Klecany
Tel: +420 284 083 111
parker.czechrepublic@parker.com

DE – Germany,
Bietigheim-Bissingen
Tel: +49 7142 351 0

DK – Denmark, Espergaerde
Tel: +45 49 12 17 00

ES – Spain, Madrid
Tel: +34 91 6 75 73 00

ES – Spain, Barcelona
Tel: +34 93 6 35 51 73

FI – Finland, Vantaa
Tel: +358 20 753 2500
parker.finland@parker.com

FR – France,
Annemasse-Cédex
Tel: +33 4 50 87 80 80

GR – Greece
K Stamatiadis - E. Amplianitis
S.A., Athen
Tel: +30 10 5 15 11 11

HK – Hong Kong
Tel: +852 2428 8008

HU – Hungary, Budapest
Tel: +36 1 220 4155
parker.hungary@parker.com

IE – Ireland, Dublin
Tel: +353 1 466 6370
parker.ireland@parker.com

IN – India, Mumbai
Tel: +91 22 6513 7081-85

IT – Italy, Corsico (MI)
Tel: +39 02 45 19 21
parker.italy@parker.com

JP – Japan, Tokyo
Tel: +81 3 6408 3901

KR – Korea, Seoul
Tel: +82 2 559 0400

KZ – Kazakhstan, Almaty
Tel: +7 7272 505 800
parker.easteurope@parker.com

L – Luxembourg, Friederich-
Hydropart S.A.R.L., Schifflange
Tel: +352 54 52 44

MX – Mexico, Apodaca
Tel: +52 81 8156 6000

MY – Malaysia, Subang Jaya
Tel: +60 3 7849 0800

NL – Netherlands, Oldenzaal
Tel: +31 541 585 000
parker.nl@parker.com

NL – Netherlands
B. V. Profiltra, Almere
Tel: +31 36 53 2 42 28

NO – Norway
Norwegian Seals AS, Kleppe
Tel: +47 51 78 60 30

NO – Norway, Asker
Tel: +47 66 75 34 00
parker.norway@parker.com

NZ – New Zealand,
Mt Wellington
Tel: +64 9 574 1744

PL – Poland, Warsaw
Tel: +48 22 573 24 00
parker.poland@parker.com

PT – Portugal, Leca da Palmeira
Tel: +351 22 999 7360
parker.portugal@parker.com

RO – Romania, Bucharest
Tel: +40 21 252 1382
parker.romania@parker.com

RU – Russia, Moscow
Tel: +7 495 645 2156
parker.russia@parker.com

SE – Sweden, Spånga
Tel: +46 8 59 79 50 00
parker.sweden@parker.com

SG – Singapore
Tel: +65 6887 6300

SK – Slovakia, Banská Bystrica
Tel: +421 484 162 252
parker.slovakia@parker.com

SL – Slovenia, Novo Mesto
Tel: +386 7 337 6650
parker.slovenia@parker.com

TH – Thailand, Bangkok
Tel: +662 186 7000-99

TR – Turkey, Istanbul
Tel: +90 216 4997081
parker.turkey@parker.com

TW – Taiwan, Taipei
Tel: +886 2 2298 8987

UA – Ukraine, Kiev
Tel: +380 44 494 2731
parker.ukraine@parker.com

UK – United Kingdom, Glasgow
Tel: +44 141 302 5000

US – USA, Cleveland
Tel: +1 216 896 3000

VE – Venezuela, Caracas
Tel: +58 212 238 5422

ZA – South Africa,
Kempton Park
Tel: +27 11 961 0700
parker.southafrica@parker.com

© 2012 Parker Hannifin Corporation · Subject to change.

PDE 3351 GB · 02/2012

Parker Prädifa

Parker Hannifin GmbH
Seal Group Europe
P.O. Box 1641
74306 Bietigheim-Bissingen · Germany
Tel. +49 (0) 7142 351-0 · Fax +49 (0) 7142 351-293
www.parker.com/packing-europe
e-mail: seal-europe@parker.com

KOVAX.CZ